СТАЛЬВЕРНА

Table of Contents

Plastic Flat Top Chain

Case Chains

Plate Top Chain

Flexible Chain

40P & 60P	
	
P36	P37

Metal Flat Top Chain

812	800	881M	881TAB
	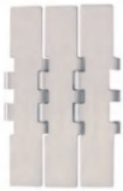		
P38	P39	P40	P41

Sprockets and Idlers for Flat Top Chain


For 820 series, P=43


For 820 & 812 series,P=44


For 821 &800 series,P=45

For 800 series,P=46


For 60P,P=46


For 880 series,P=47


For 882 series,P=48


For 812series,P=49


For 881 series,P=50


For 1060,P=51


For RT114,P=51


For 1701,P=52


For 600,P=52


For 1400,P=53


For 1100P,P=53


For 1843TAB ,40P ,P=54


For for 1873TAB ,P=54


For FC series,P=55-56

Corner Track

880TAB,881TAB	882TAB	880M&881M	880TAB-BO	1873TAB
				
P57	P58	P59	P60	P61

P=12.7mm (0.5")

X1270 Flat Top

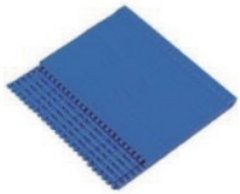

P=62

X1270 Flush Grid

P=62

X2120 Flat Top

P=63

X2120 Top Rubber

P=63

P=15.2mm (0.6")

X1100 Flat Top

P=64

X1100 Flush Grid

P=64

X1500

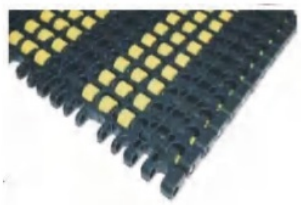

P=65

P=19.05mm (0.75")

X5935 Flat Top

P=66

X5935 with cleats

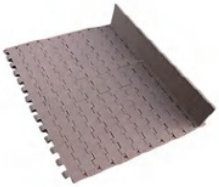

P=66

X8505 Flat Top

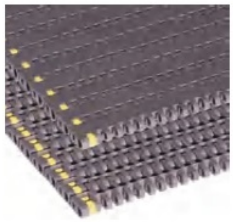

P=67

X8505 Flush Grid

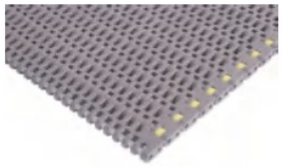

P=67

P=25.4mm (1")

X1000 Flat Top

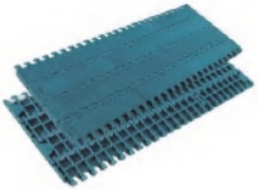

P=68

X1000 Flush Grid

P=69

X1600 Flat top

P=70

X1600 Mold to Width

P=71

X700 Flat Top

P=72

X700 with cleats

P=72

X2500 Flat Top

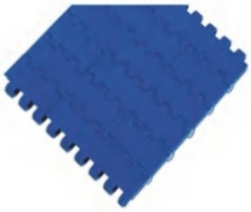

P=73

X2500 Flush Grid

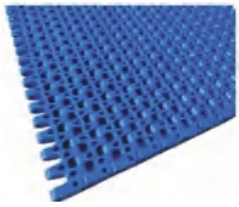

P=73

X2500 with Cleats

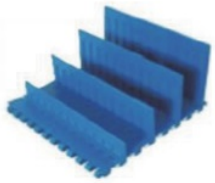

P=74

X2500 with Cleats +side walls

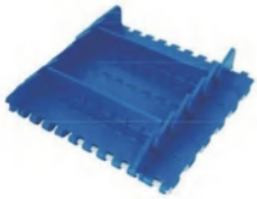

P=74

X7100

P=75

X7300

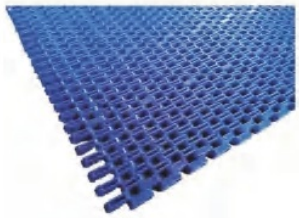

P=76

X2253

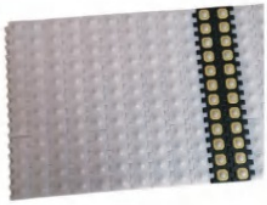

P=77

X7705

P=77

X2540

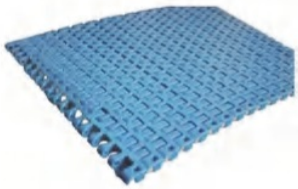

P=78

P=27.2mm (1.07")

X900 Flat Top

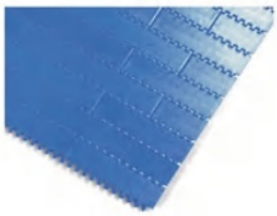

P=79

X900 Flush Grid

P=79

X900 Perforated

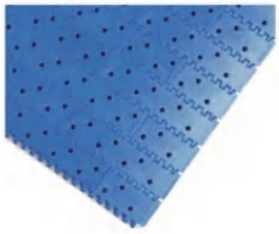

P=80

X900 Raised Rib

P=80

X900 Flat Top with Rubber Top

P=81

X900 Mold to Width

P=81

X900 Flat Top with cleats

P=82

X900 Flush Grid with cleats

P=82

P=31.75mm (1.25")

X2556Series

P=83

X2556A

P=84

X2556-SR

P=85

X2556B-SR

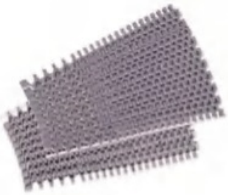

P=86

P=50.8mm (2")

X5032  P=87	X400 Roller Top  P=87	X4809 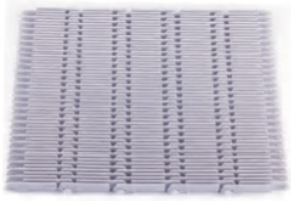 P=88	MPB-Flat Top  P=89
MPB-Perforated 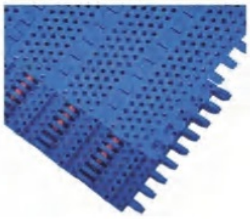 P=89	MPB-Flush Grid 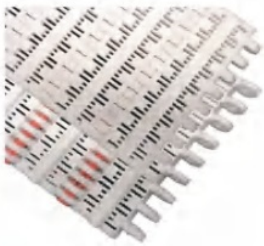 P=90	MPB-Hook  P=90	MPB Flat Top with cleats  P=91
MPB Flush Grid with cleats  P=91	MPB Flush Grid with cleats+Side walls  P=91	OPB-Flat Top 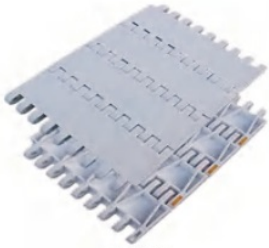 P=92	OPB-Perforated  P=92
OPB-Flush Grid  P=93	OPB-Flush Grid-S 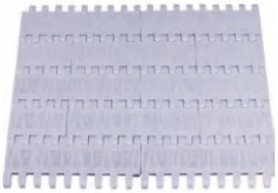 P=93	OPBFlush Grid with cleats  P=94	OPB Flush Grid with cleats+Side walls  P=94

Sprockets and Idlers for Modular belt

 For X1270	 For X2120	 For X1100	 For X1500	 For X5935	 For X8505

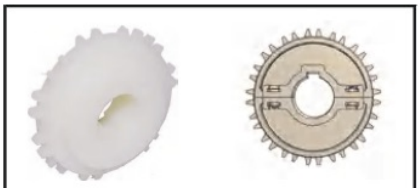
For X1000


For X700


For X2500


For X7100


For X7300


For X2253


For X2540


For X7705


For X900


For X2556


X2556-SR


For X4809


For X5032


FOR X400

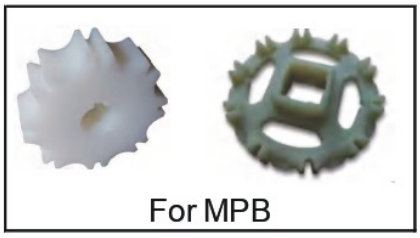
For MPB


For OPB

Wear strips, Chain return system & side guide solutions

WR-S-40-F
WR--A-40-F

P112

WR-S-43-B
WR--A-43-B

P112

WR-S-40-L
WR-A-40-L

P113

WR-A-38-F
WR-A-50-F

P113

SD-RS-17

P116

SD-RS-20

P116

SD-DS

P116

SD-FS-60

P117

SD-FS-80

P117

SD-FS-100
SD-FS-120

P117

SD-RSG-S

P118

P119

SD-RSG-FS-274

P120

SD-RSG-FS-84

P120

Return wheel

P120

Components

X01	X02	X03	X04	X05
				
P121	P121	P121	P122	P122
X06	X07	X08	X09	X10
				
P122	P123	P123	P123	P123
X11	X12	X13	X14	X15
				
P124	P124	P124	P124	P124
X16-1	X16-2	X17-1	X17-2	X18
				
P125	P125	P125	P125	P126
X19	X20	X21	X22	X23A
				
P126	P126	P126	P127	P127
X23B	X24A	X24B	XS01	XS02
				
P127	P127	P127	P128	P128

XS03	XS-04	XS-05	XS-06&XS-07	XS-08
				
P128	P128	P128	P128	P128

XS-09	XS-10	XS-11	XS-12	XS-13
				
P129	P129	P129	P129	P129

X26	X27	X28	X29	X30
				
P130	P130	P130	P131	P131

X31	X32	X33		
				
P131	P131	P131	P132	P132

		Nose Bar	AF-1	AF-2
				
P132	P132	P133	P134	P134

AF-3	Round Tubes	Square Tubes	UCFL	UCFP
				
P134	P135	P135	P136	P136

UCFB	RCT1	RCT2
		
P136	P137	P137

820 Series

Plate Materials: LF-Brown
Pin Material: Cold rolled austenitic stainless steel
Working load N (21°C): 1450 N
Working temp : -30°C to + 90°C
Max speed : 50m/min by lubricant , 30m/min by dry
Max conveyor length: 15 M
Supply unit : 3.048 m =10ft or 1 m = 26 pcs

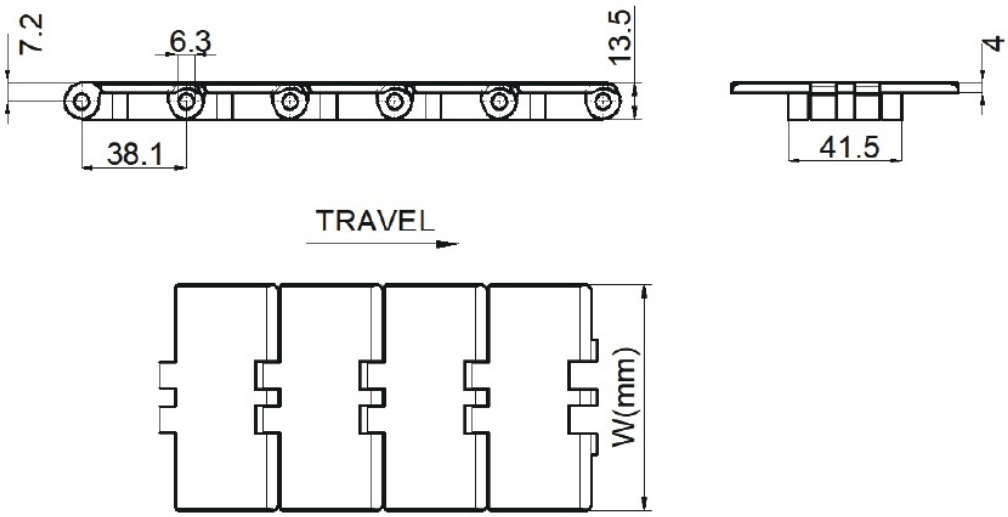

P43-44

ref.No	width W		Weight	bfl.Radius	
	mm	inch	kg/m	mm	inch
LF820-K250	63.5	2.50	0.69	50	2.0
LF820-K325	82.6	3.25	0.82	50	2.0
LF820-K350	88.9	3.50	0.87	50	2.0
LF820-K400	101.6	4.00	0.95	50	2.0
LF820-K450	114.3	4.50	1.00	50	2.0
LF820-K500	127	5.00	1.10	50	2.0
LF820-K600	152.4	6.00	1.20	50	2.0
LF820-K750	190.5	7.50	1.44	50	2.0

828 Series

Plate Materials: LF-Brown
Pin Material: Cold rolled austenitic stainless steel
Working load N (21°C): 1650 N
Working temp : -30°C to + 90°C
Max speed : 50m/min by lubricant , 30m/min by dry
Max conveyor length: 15 M
Supply unit : 3.048 m =10ft or 1 m = 26 pcs

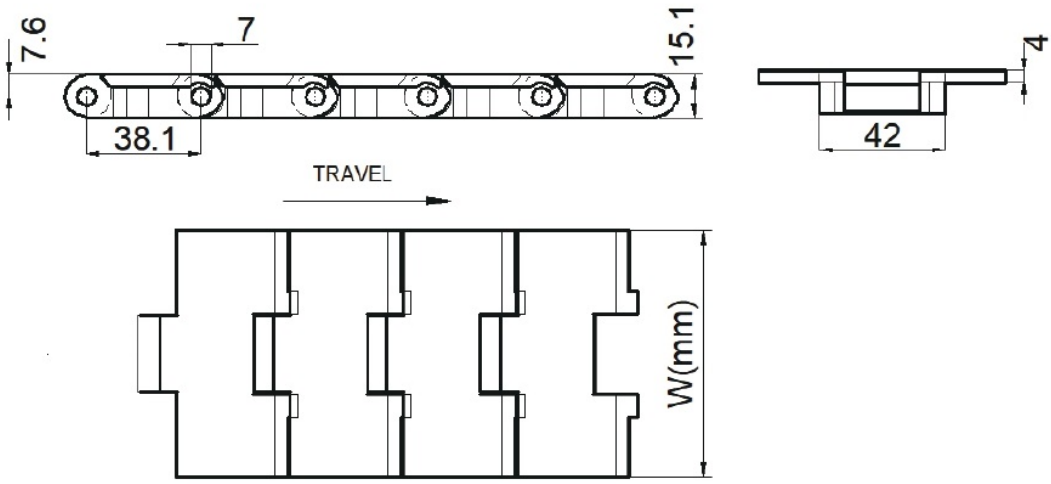

P47

ref.No	width W		Weight	bfl.Radius	
	mm	inch	kg/m	mm	inch
LF828-K325	82.6	3.25	1.07	50	2.0
LF828-K330	83.8	3.30	1.13	50	2.0

821 Series

Plate Materials: LF-Brown
Pin Material: Cold rolled austenitic stainless steel
Working load N (21°C): 3100 N
Working temp : -30°C to + 90°C
Max speed : 50m/min by lubricant , 30m/min by dry
Max conveyor length: 15 M
Supply unit : 3.048 m =10ft or 1 m = 26 pcs

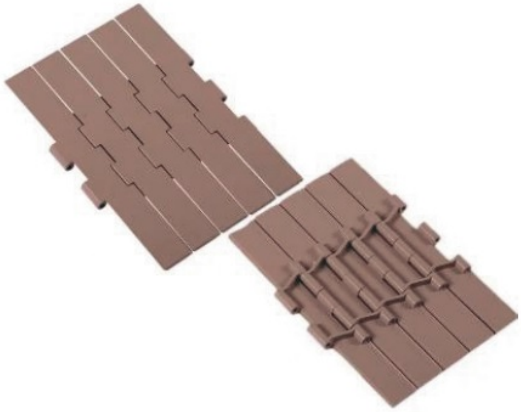

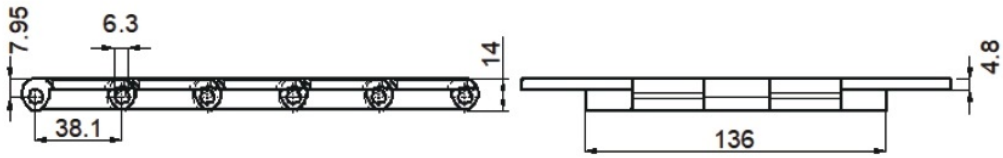

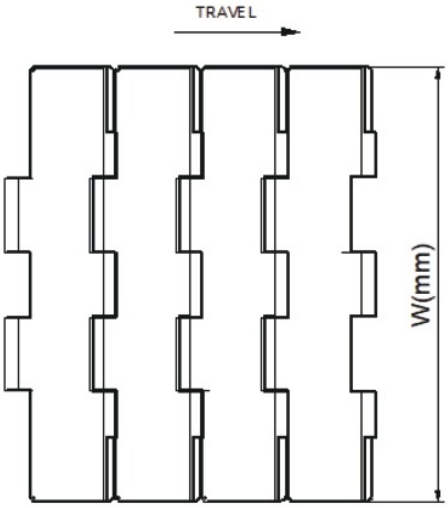

P45

ref.No	width W		Weight	bfl.Radius	
	mm	inch	kg/m	mm	inch
LF821-K750	190.5	7.5	2.5	50.0	2.0
LF821-K1000	254.0	10.0	2.7	50.0	2.0
LF821-K1200	304.8	12.0	3.2	50.0	2.0

880TAB Series

Plate Materials: LF-Brown
Pin Material: Cold rolled austenitic stainless steel
Working load N (21°C): 2300 N
Working temp : -30°C to + 90°C
Max speed : 50m/min by lubricant , 30m/min by dry
Max conveyor length: 15 M
Supply unit : 3.048 m =10ft or 1 m = 26 pcs

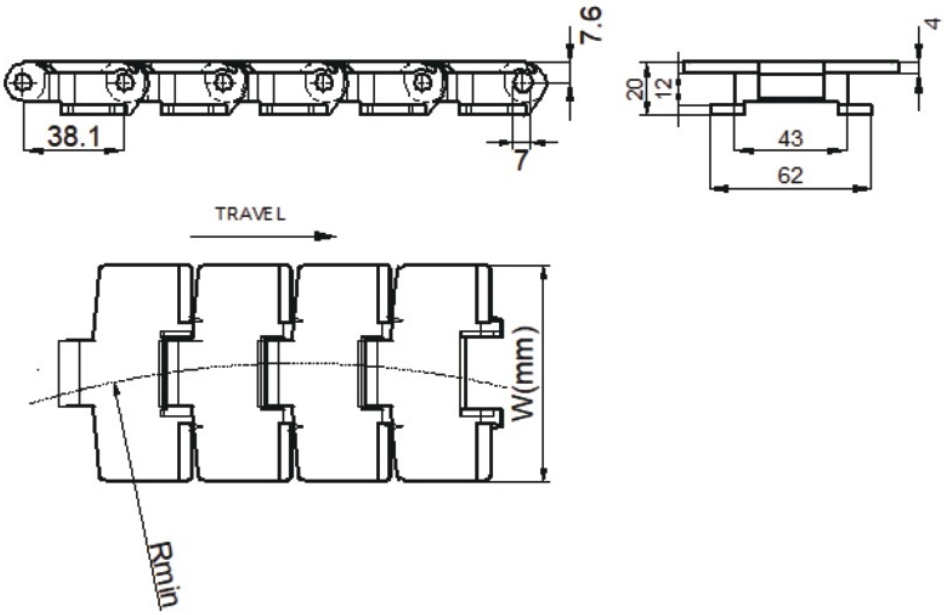


P47

P57

ref.No	width W		Weight	bfl.Radius		Radius	
	mm	inch	kg/m	mm	inch	mm	inch
LF880TAB-K325	82.6	3.3	1.0	75.0	3.0	500.0	19.69
LF880TAB-K450	114.3	4.5	1.3	75.0	3.0	500.0	19.69

882TAB Series

Plate Materials: LF-Brown
Pin Material: Cold rolled austenitic stainless steel
Working load N (21°C): 4100 N
Working temp : -30°C to + 90°C
Max speed : 50m/min by lubricant , 30m/min by dry
Max conveyor length: 15 M
Supply unit : 3.048 m =10ft or 1 m = 26 pcs

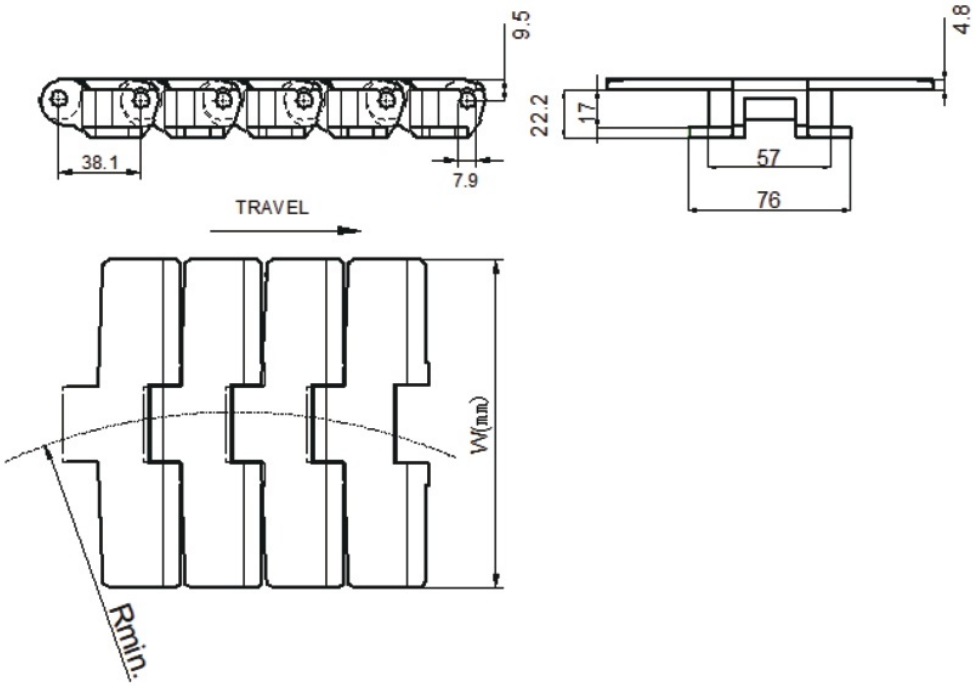


P48

P58

ref.No	width W		Weight	bfl.Radius		Radius	
	mm	inch	kg/m	mm	inch	mm	inch
LF882TAB-K500	127.0	5.0	1.9	75.0	3.0	610.0	24.0
LF882TAB-K600	152.4	6.0	2.1	75.0	3.0	610.0	24.0
LF882TAB-K750	190.5	7.5	2.4	75.0	3.0	610.0	24.0
LF882TAB-K1000	254.0	10.0	2.7	75.0	3.0	610.0	24.0
LF882TAB-K1200	304.8	12.0	2.9	75.0	3.0	610.0	24.0

880TAB-BO Series

Plate Materials: LF-Brown
Pin Material: Cold rolled austenitic stainless steel
Working load N (21°C): 2300 N
Working temp : -30°C to + 90°C
Max speed : 50m/min by lubricant , 30m/min by dry
Max conveyor length: 15 M
Supply unit : 3.048 m =10ft or 1 m = 26 pcs

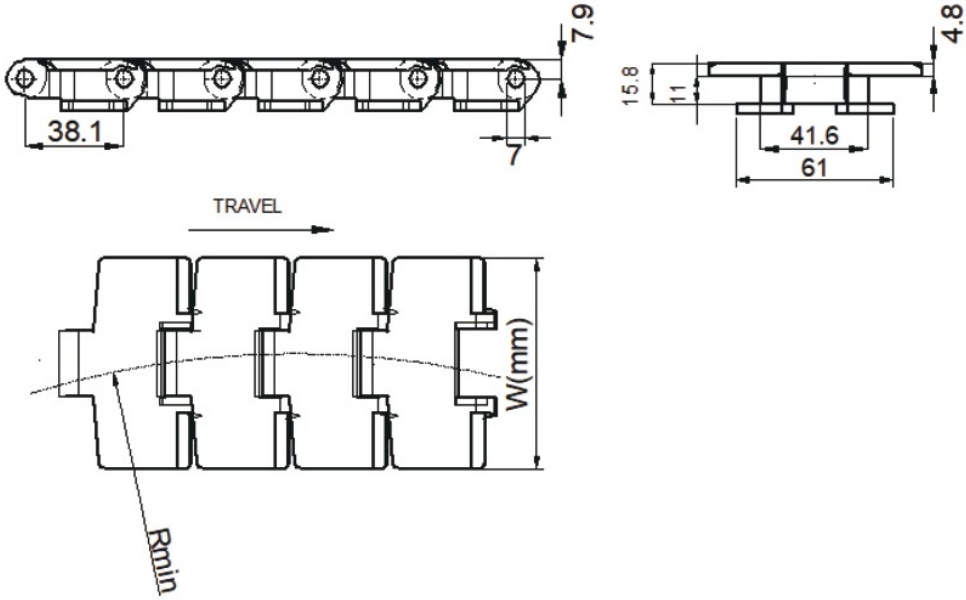


P47

P60

ref.No	width W		Weight	bfl.Radius		Radius	
	mm	inch	kg/m	mm	inch	mm	inch
LF880TAB-BO-K325	82.6	3.25	1.05	75.0	3.0	200.0	7.8
LF880TAB-BO-K450	114.3	4.5	1.15	75.0	3.0	200.0	7.8

880B Series

Plate Materials: LF-Brown
Pin Material: Cold rolled austenitic stainless steel
Working load N (21°C): 2300 N
Working temp : -30°C to + 90°C
Max speed : 50m/min by lubricant , 30m/min by dry
Max conveyor length: 15 M
Supply unit : 3.048 m =10ft or 1 m = 26 pcs

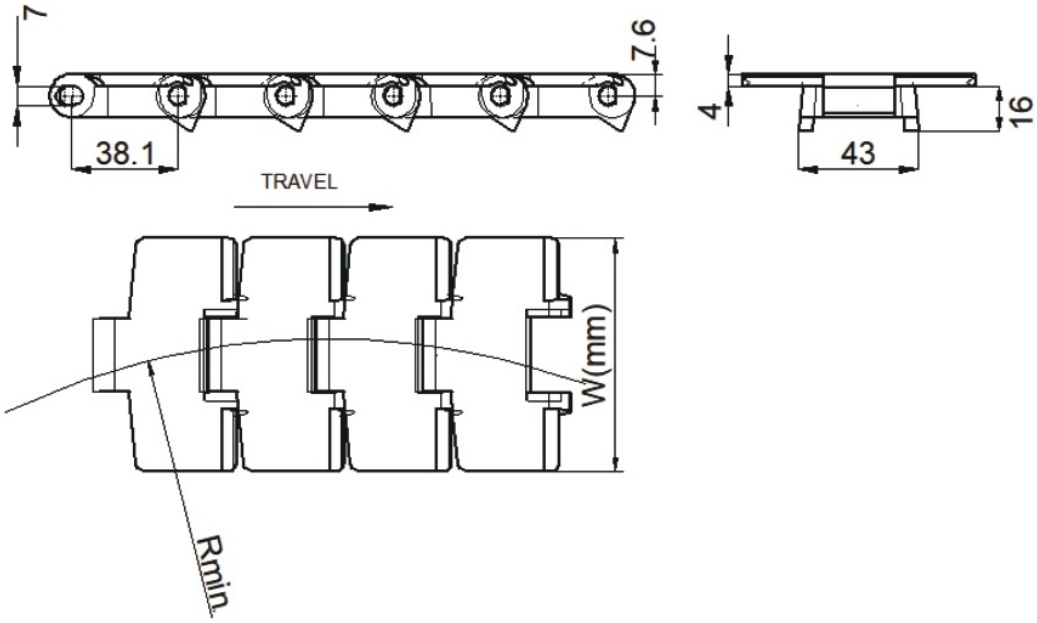


P47

P58

ref.No	width W		Weight	bfl.Radius		Radius	
	mm	inch	kg/m	mm	inch	mm	inch
LF880B-K325	82.6	3.25	0.9	75.0	3.0	500.0	19.69
LF880B-K450	114.3	4.5	1.0	75.0	3.0	610.0	24.0

880M Series

Plate Materials: LF-Brown (Magnetic)
Pin Material: Cold rolled austenitic stainless steel
supply unit : 3.048 m =10ft
or 1 m = 26 pcs
Average breaking load:4300N

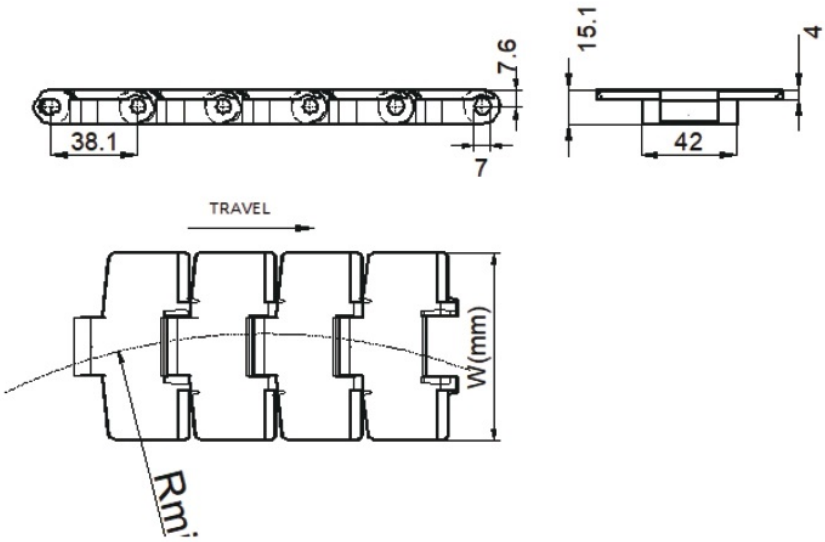


P47

P59

ref.No	width W		Weight	bfl.Radius		Radius	
	mm	inch	kg/m	mm	inch	mm	inch
LF880M-K325	82.6	3.25	1.0	75.0	3.0	500.0	19.69
LF880M-K330	83.8	3.30	1.1	75.0	3.0	500.0	19.39
LF880M-K450	114.3	4.50	1.2	75.0	3.0	500.0	19.69

1060 Series

Plate Materials: LF-Green
Pin Material: Cold rolled austenitic stainless steel
Working load N (21°C): 2550 N
Working temp : -30°C to + 90°C
Max speed : 50m/min by lubricant , 30m/min by dry
Max conveyor length: 15 M
Supply unit : 3.048 m =10ft or 1 m = 26 pcs

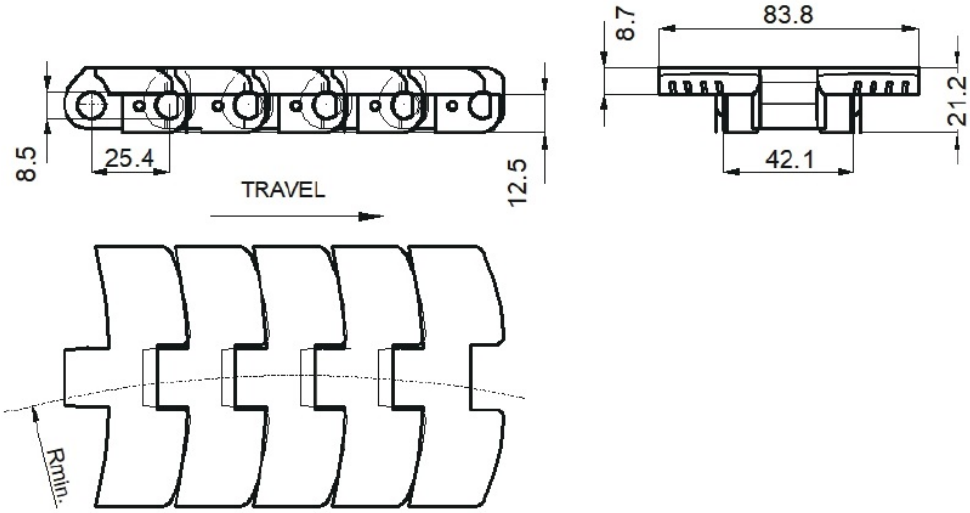


P51

P60

ref.No	width W		Weight	bfl.Radius		Radius	
	mm	inch	kg/m	mm	inch	mm	inch
LF1060FT-K330	83.8	3.30	1.68	130.0	5.12	500.0	19.69

1060 Series

Plate Materials: LF-Green
Pin Material: Cold rolled austenitic stainless steel
Working load N (21°C): 2550 N
Working temp : -30°C to + 90°C
Max speed : 50m/min by lubricant , 30m/min by dry
Max conveyor length: 15 M
Supply unit : 3.048 m =10ft or 1 m = 26 pcs

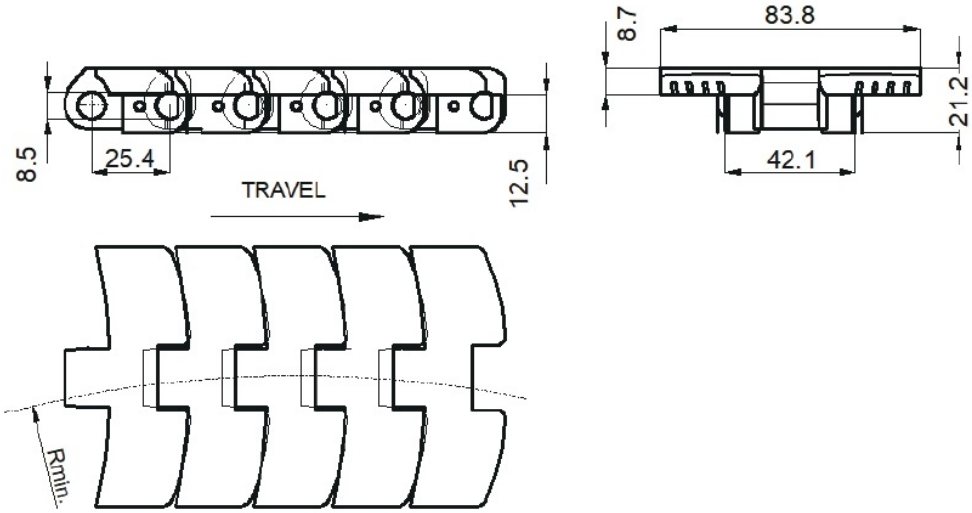


P51

P60

ref.No	width W		Weight	bfl.Radius		Radius	
	mm	inch	kg/m	mm	inch	mm	inch
LF1060FG-K330	83.8	3.30	1.30	130.0	5.12	500.0	19.69

783T Series

Plate Materials: LF-Grey
Pin Material: Cold rolled austenitic stainless steel
Working load N (21°C): 2550 N
Working temp : -30°C to + 90°C
Max speed : 50m/min by lubricant , 30m/min by dry
Max conveyor length: 15 M
Supply unit : 3.048 m =10ft or 1 m = 26 pcs
NOTE: Sprockets same as 1060 series
Corner track same as 880TAB series

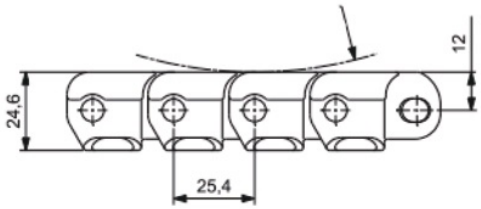

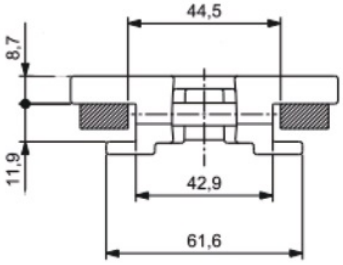

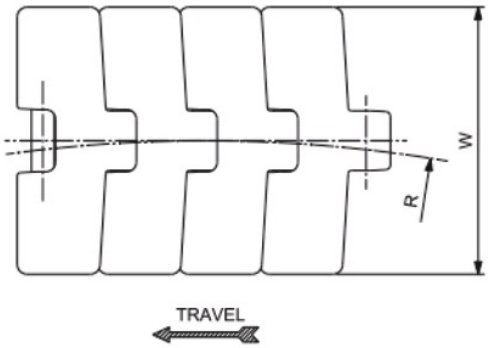


P51

P57

ref.No	width W		Weight	bfl.Radius		Radius	
	mm	inch	kg/m	mm	inch	mm	inch
783T-K330	83.8	3.30	1.76	130.0	5.12	500.0	19.69
783T-K450	114.3	4.50	2.00	130.0	5.12	610.0	24.01

783M Series

Plate Materials: LF-Grey
Pin Material: Magnetic Steel
Working load N (21°C): 2550 N
Working temp : -30°C to + 90°C
Max speed : 50m/min by lubricant , 30m/min by dry
Max conveyor length: 15 M
Supply unit : 3.048 m =10ft or 1 m = 26 pcs
NOTE: Sprockets same as 1060 series
Corner track same as 1060 series

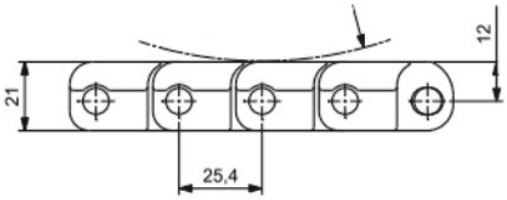

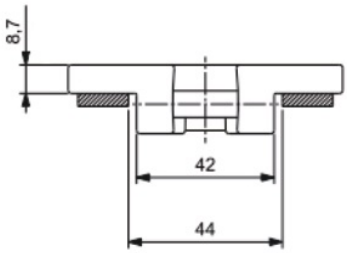

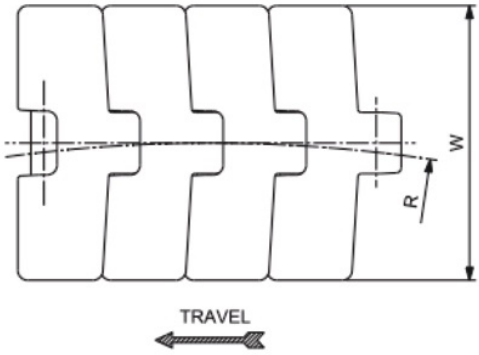


P51

P60

ref.No	width W		Weight	bfl.Radius		Radius	
	mm	inch	kg/m	mm	inch	mm	inch
783M-K330	83.8	3.30	1.76	130.0	5.12	500.0	19.69

LBP Chains

(LOW Back-line Pressure)
Straight Running

Plate Materials: LF-Brown
Pin Material: Cold rolled austenitic stainless steel
Roller Color : Blue
supply unit : 1 m = 26 pcs
Working load (25°C）：3500N

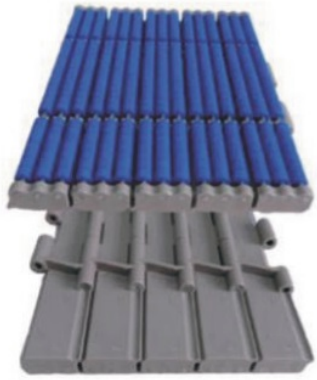

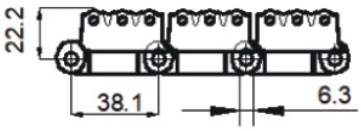

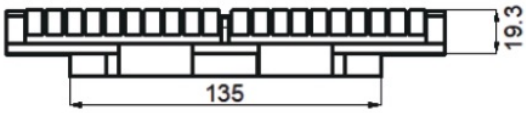

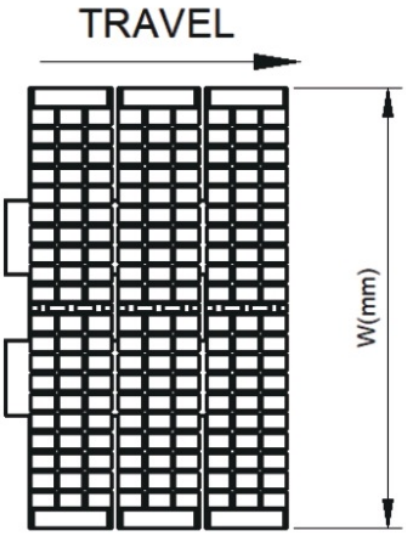

P45

ref.No	width W		Weight	bfl.Radius	
	mm	inch	kg/m	mm	inch
LBP821K750	190.5	7.50	5.30	255.0	10.03
LBP821-K1000	254.0	10.00	6.60		
LBP821-K1200	304.8	12.00	7.90		

LBP Chains

(LOW Back-line Pressure)
Side Flexing
Plate Materials: LF-Brown
Pin Material: Cold rolled austenitic stainless steel
Roller Color : Blue
supply unit : 1 m = 26 pcs
Working load (25°C）：3500N

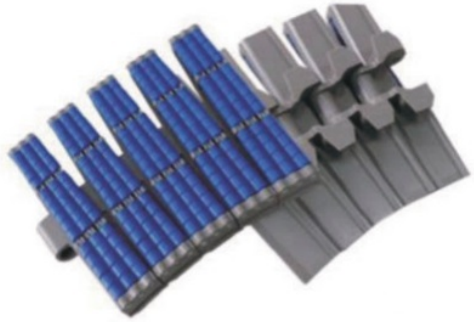

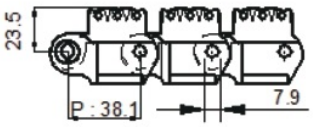

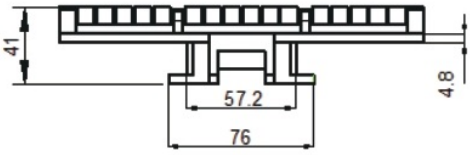

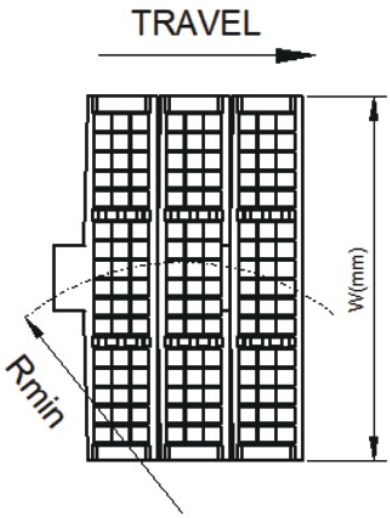


P48


P58

ref.No	width W		Weight	bfl.Radius		Radius	
	mm	inch	kg/m	mm	inch	mm	inch
LBP882TAB-K750	190.5	7.50	5.10	101.0	3.97	500.0	24.0
LBP882TAB-K1000	254.0	10.00	5.60				
LBP882TAB-K1200	304.8	12.00	6.50				

RT114 Series

Plate Material: LF-White
Pin Material: Cold rolled austenitic stainless steel
supply unit : 3.048 m =10ft
or 1 m = 26 pcs

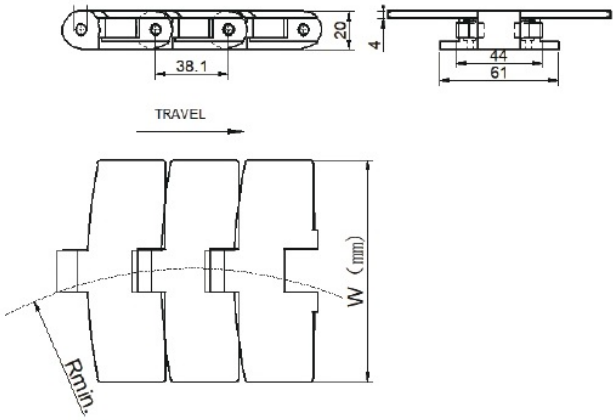

P51

ref.No	width W		Weight	bfl.Radius		Radius	
	mm	inch	kg/m	mm	inch	mm	inch
RT114	114.3	4.5	1.30	75.0	3.0	610.0	24.0

1100P

Plate Material: LF-Brown
Pin Material: Cold rolled austenitic stainless steel
supply unit : 3.048 m =10ft

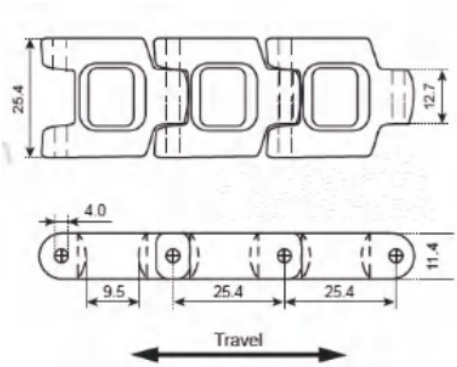

P53

ref.No	width W		Weight
	mm	inch	kg/m
1100P	25.4	1.0	0.30

1701 Series

Plate Material: LF-White
Pin Material: Cold rolled austenitic stainless steel
supply unit : 3.048 m =10ft or 1 m

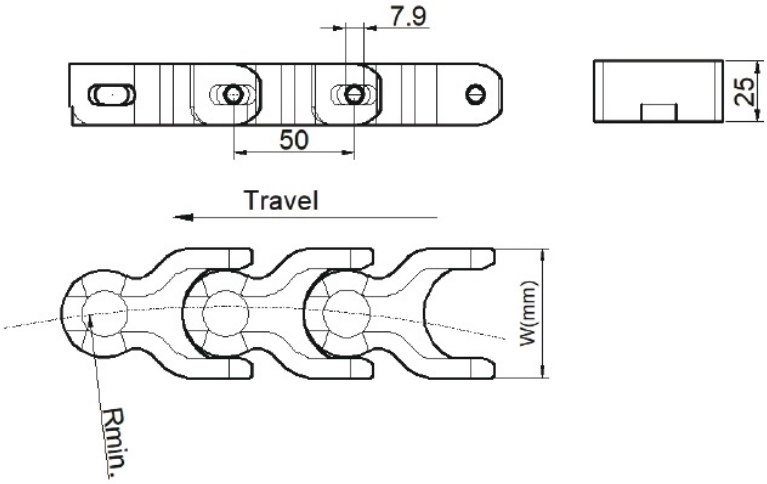

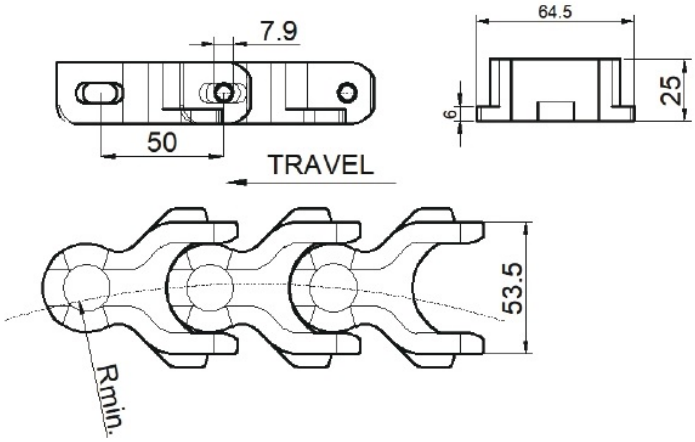

P52

ref.No	width W		Weight	bfl.Radius		Radius	
	mm	inch	kg/m	mm	inch	mm	inch
LF1701	53.3	2.10	1.37	75	3.0	150	5.91
LF1701TAB	53.3	2.10	1.40	75	3.0	150	5.91

1702 Series

Plate Material:LF-White
Pin Material: Cold rolled austenitic stainless steel
supply unit : 3.048 m =10ft
or 1 m

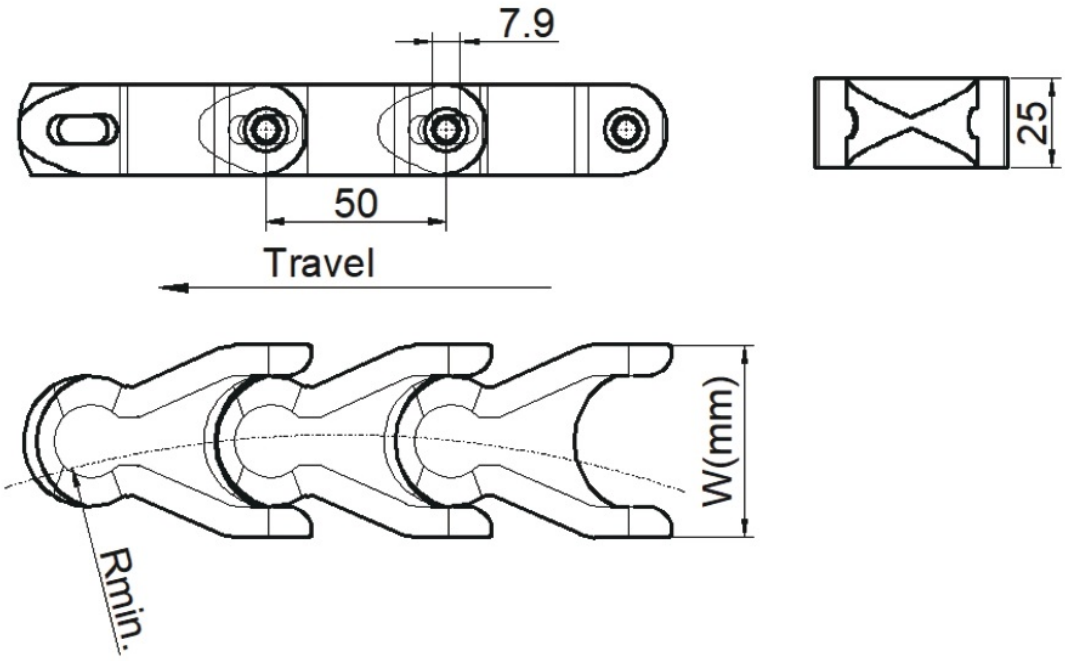

P52

ref.No	width W		Weight	bfl.Radius		Radius	
	mm	inch	kg/m	mm	inch	mm	inch
LF1702	53	2.10	1.45	75	3.0	150	5.91

1775 Series

Plate Material: LF-White
Pin Material: Cold rolled austenitic stainless steel
supply unit : 3.048 m =10ft
or 1 m

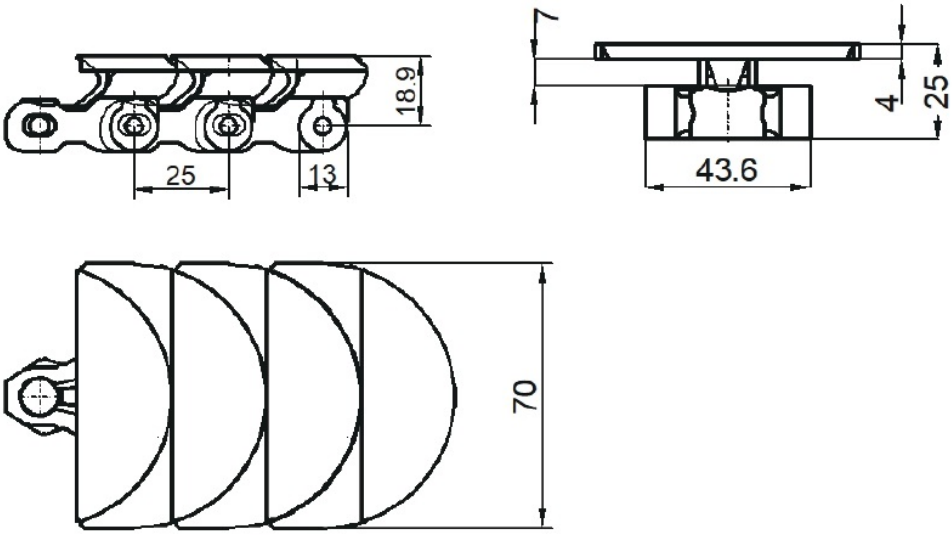

P55

ref.No	width W		Weight	bfl.Radius		Radius	
	mm	inch	kg/m	mm	inch	mm	inch
1775	70	2.76	1.05	80	3.1	150	5.91

1765 Series

Plate Material: LF-Grey
Pin Material: Cold rolled austenitic stainless steel
supply unit : 3.048 m =10ft
or 1 m

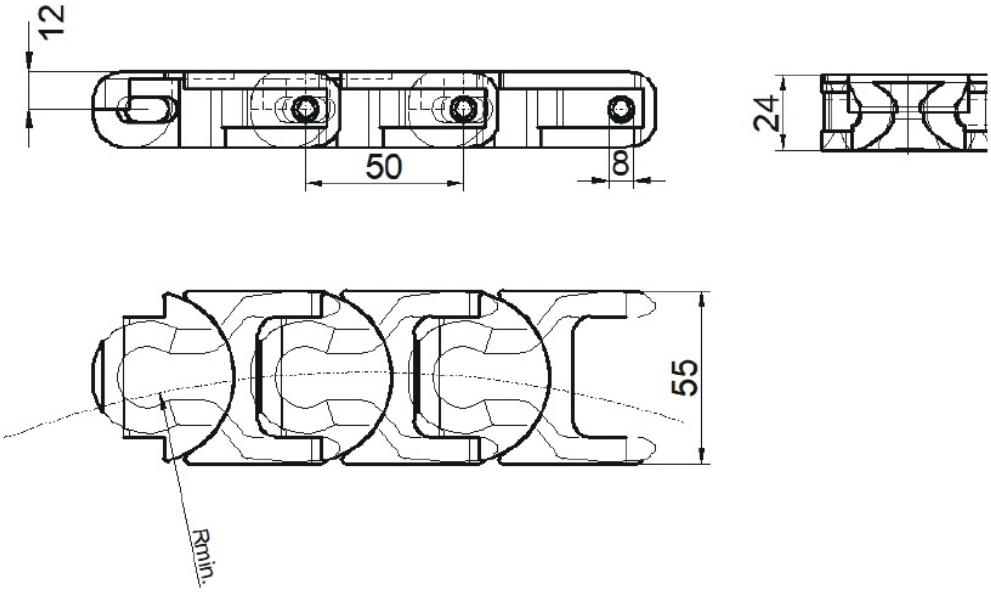

P52

ref.No	width W		Weight	bfl.Radius		Radius	
	mm	inch	kg/m	mm	inch	mm	inch
1765	55	2.17	1.46	63.5	2.5	125	4.92

600 Series

Plate Material: LF-White
Pin Material: Cold rolled austenitic stainless steel
supply unit : 3.048 m =10ft
or 1 m

600

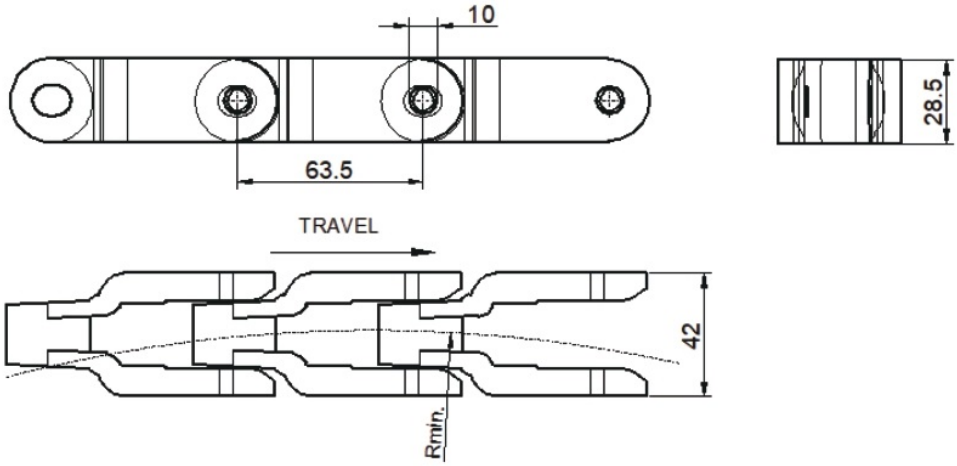

600TAB

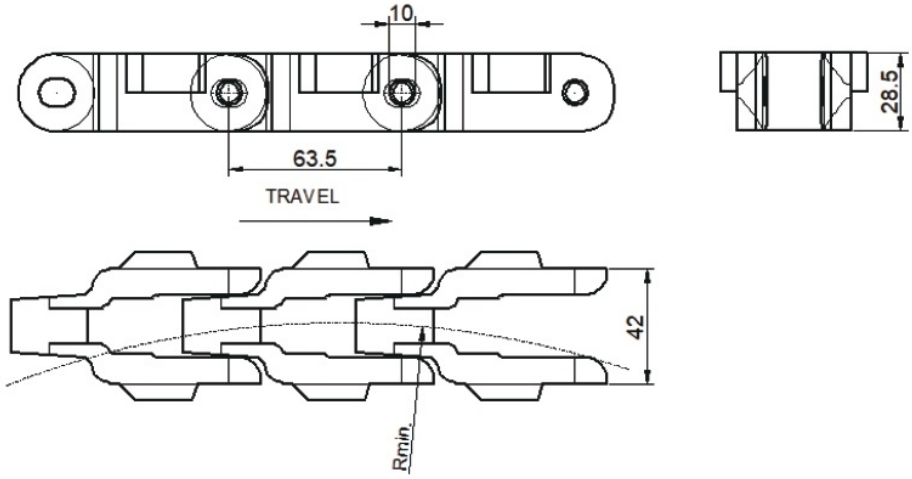

P52

ref.No	width W		Weight	bfl.Radius		Radius	
	mm	inch	kg/m	mm	inch	mm	inch
600	42	1.65	1.26	75	3.0	600	23.62
600TAB	42	1.65	1.42	75	3.0	600	23.62

1400 Series

Plate Material: LF-White
Pin Material: Cold rolled austenitic stainless steel
supply unit : 3.048 m =10ft or 1 m

1400

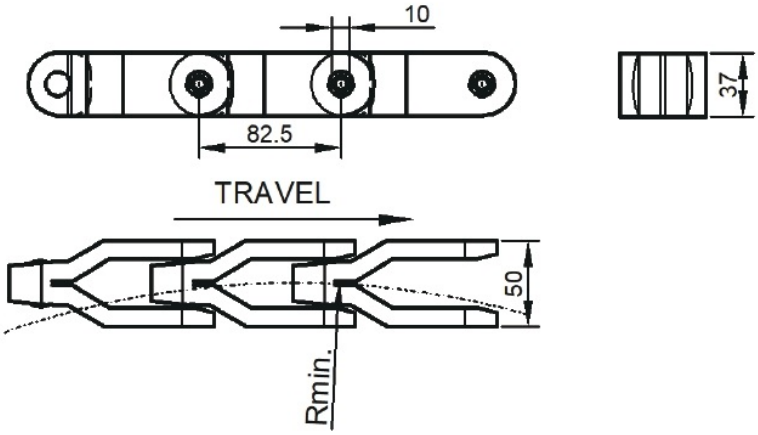

1400TAB

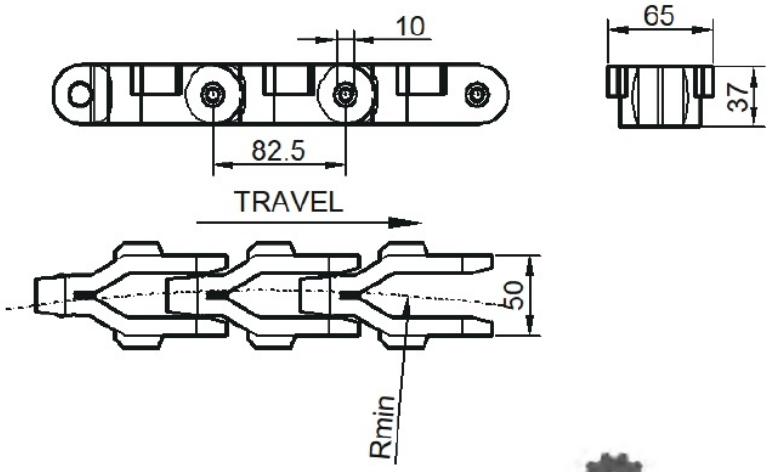

P53

ref.No	width W		Weight	bfl.Radius		Radius	
	mm	inch	kg/m	mm	inch	mm	inch
1400	50	1.97	1.75	75	3.0	450	17.72
1400TAB	50	1.97	2.02	75	3.0	450	17.72

1843 Series

Plate Material: LF-Brown
Roller Material: SUS 304
or Steel
supply unit : 1.524 m =5 ft
Working load (25°C）： 2000N (S)
and 1400N(SS)

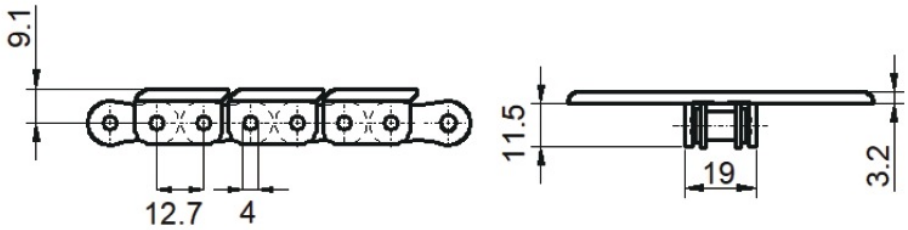

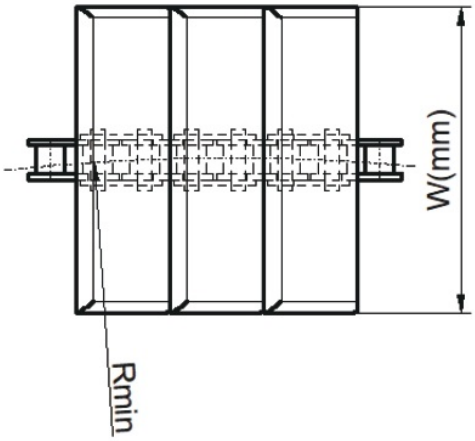

P54

ref.No	Roller Mat	width W		Weight	bfl.Radius	
		mm	inch	kg/m	mm	inch
S1843-K137	steel	34.9	1.37	0.83	100	29.0
S1843-K200		50.8	2.00	0.89	100	29.0
S1843-K325		82.6	3.25	1.03	100	29.0
SS1843-K137	stainless steel	34.9	1.37	0.83	100	29.0
SS1843-K200		50.8	2.00	0.89	100	29.0
SS1843-K325		82.6	3.25	1.03	100	29.0

1873TAB Series

Plate Materials: LF-Brown
Roller Material: SUS 304
or Steel
supply unit : 1.524 m =5 ft
Working load (25°C）： 3500N (S)
and 1600N(SS)

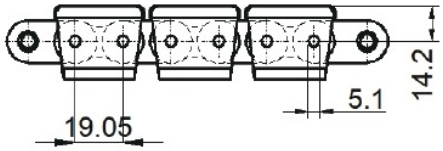

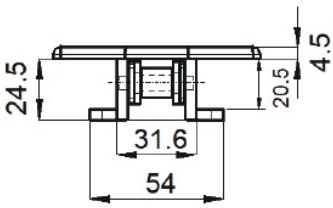

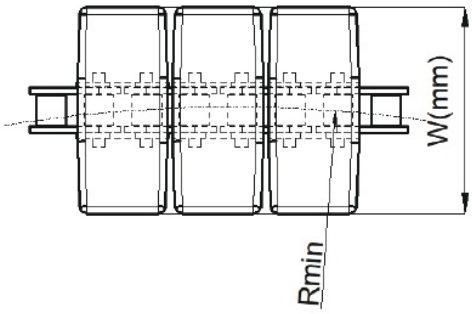


P54

P61

ref.No	Roller Mat	width W		Weight	bfl.Radius		Radius	
		mm	inch	kg/m	mm	inch	mm	inch
S1873TAB-K325	steel	82.6	3.25	2.10	150	29.0	500	19.68
S1873TAB-K450		114.3	4.50	2.26	150	29.0	500	19.68
S1873TAB-K600		152.4	6.00	2.41	150	29.0	500	19.68
S1873TAB-K750		190.5	7.50	2.56	150	29.0	500	19.68
S1873TAB-K1000		254.0	10.00	2.78	150	29.0	500	19.68
S1873TAB-K1200		304.8	12.00	3.01	150	29.0	500	19.68
S1873TAB-K2000		508.0	20.00	5.38	150	29.0	610	24.02
SS1873TAB-K325	stainless steel	82.6	3.25	2.10	150	29.0	500	19.68
SS1873TAB-K450		114.3	4.50	2.26	150	29.0	500	19.68
SS1873TAB-K600		152.4	6.00	2.41	150	29.0	500	19.68
SS1873TAB-K750		190.5	7.50	2.56	150	29.0	500	19.68
SS1873TAB-K1000		254.0	10.00	2.78	150	29.0	500	19.68
SS1873TAB-K1200		304.8	12.00	3.01	150	29.0	500	19.68
SS1873TAB-K2000		508.0	20.00	5.38	150	29.0	610	24.02

1873-GD Series

Plate Materials: LF-Brown
Roller Material: SUS 304
or Steel
supply unit : 1.524 m =5 ft
Working load (25°C）： 3500N (S)
and 1600N(SS)

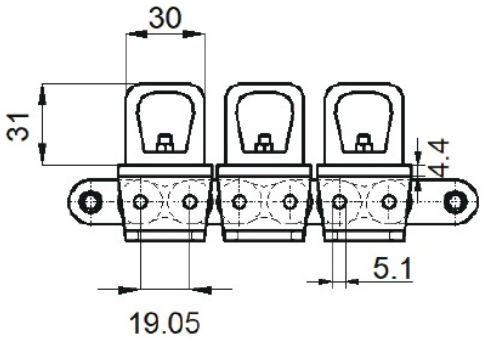

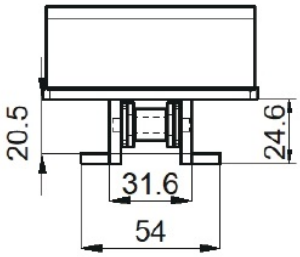

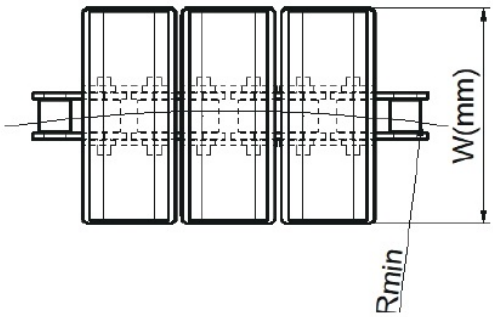


P54

P61

ref.No	Roller Mat	width W		Weight	bfl.Radius		Radius	
		mm	inch	kg/m	mm	inch	mm	inch
S1873TAB-GD-K325	steel	82.6	3.25	2.10	150	29.0	500	19.68
S1873TAB-GD-K600		152.4	6.00	2.41	150	29.0	500	19.68
S1873TAB-GD-K750		190.5	7.50	2.56	150	29.0	500	19.68
SS1873TAB-GD-K325	stainless steel	82.6	3.25	2.10	150	29.0	500	19.68
SS1873TAB-GD-K600		152.4	6.00	2.41	150	29.0	500	19.68
SS1873TAB-GD-K750		190.5	7.50	2.56	150	29.0	500	19.68

1873-GS3J Series

Plate Material: LF-Brown
Roller Material: SUS 304
or Steel
Rubber color : Black or Green
supply unit : 1.524 m =5 ft
Working load (25°C）： 3500N (S)
and 1600N(SS)

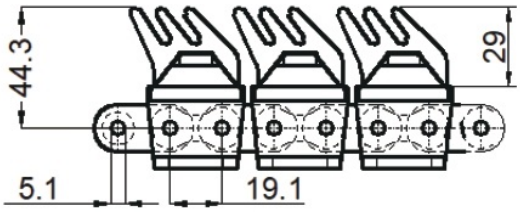

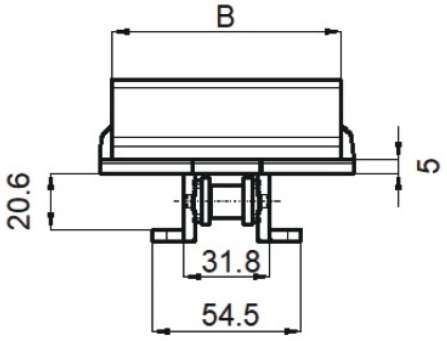

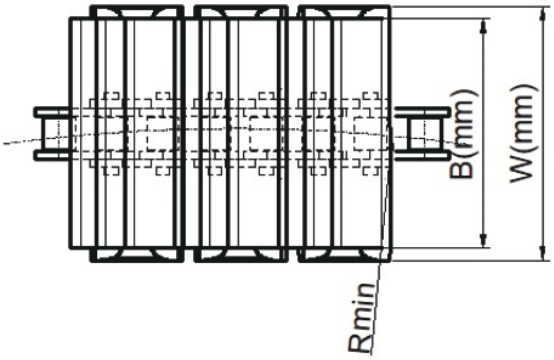


P54

P61

ref.No	Roller Mat	width W		Weight	bfl.Radius		Radius	
		mm	inch	kg/m	mm	inch	mm	inch
S1873TAB-GS3J-K325	steel	82.6	3.25	2.10	150	29.0	500	19.68
S1873TAB-GS3J-K450		114.3	4.50	2.26	150	29.0	500	19.68
SS1873TAB-GS3J-K325	stainless steel	82.6	3.25	2.10	150	29.0	500	19.68
SS1873TAB-GS3J-K450		114.3	4.50	2.26	150	29.0	500	19.68

1873-GS3J Series

Plate Material: LF-Brown
Roller Material: SUS 304
or Steel
Rubber materail : TPE
Hardness of Rubber: 40 shA
supply unit : 1.524 m =5 ft
Working load (25°C）：3500N (S)
and 1600N(SS)

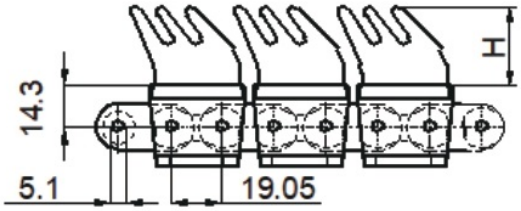

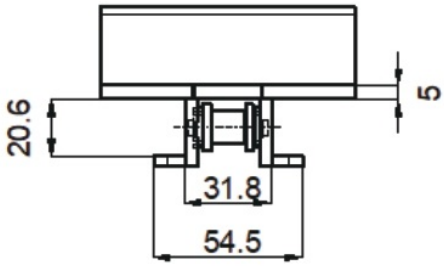

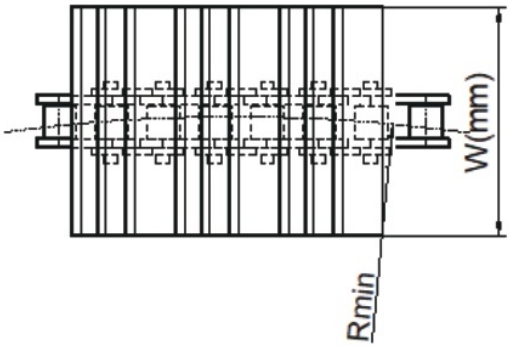


P54

P61

ref.No	H	Roller Mat	width W	B	Weight	Radius	
	mm		mm	mm	kg/m	mm	inch
S1873TAB-GS3J-G40-K325	40	steel	82.6	82.6	2.10	500	19.68
S1873TAB-GS3J-G40-K450			114.3	114.3	2.26	500	19.68
SS1873TAB-GS3J-G40-K325	40	stainless steel	82.6	82.6	2.10	500	19.68
SS1873TAB-GS3J-G40-K450			114.3	114.3	2.26	500	19.68
S1873TAB-GS3J-G30-K325	30	steel	82.6	82.6	1.90	500	19.68
S1873TAB-GS3J-G30-K450			114.3	114.3	2.06	500	19.68
SS1873TAB-GS3J-G30-K325	30	stainless steel	82.6	82.6	1.90	500	19.68
SS1873TAB-GS3J-G30-K450			114.3	114.3	2.06	500	19.68

1873TAB-K2000-WB Series

Plate Material: LF-Brown
Roller Material: SUS 304 or Steel
Rubber Material:TPE
supply unit : 1.524 m =5 ft

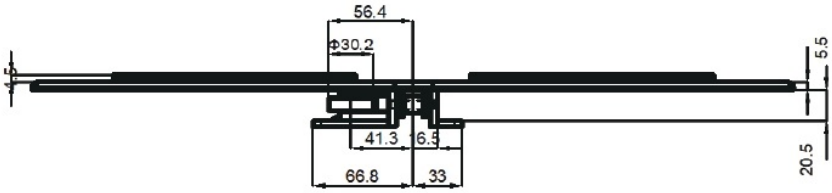

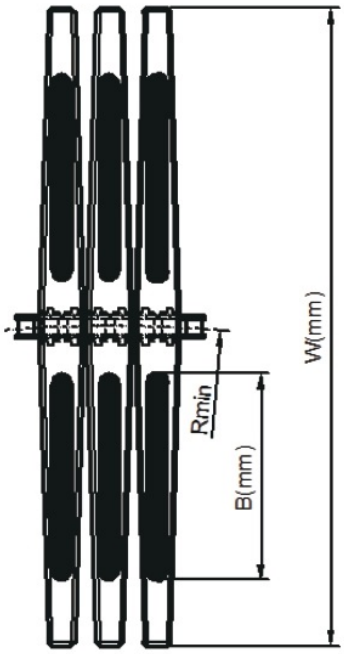


P54

P61

ref.No	Roller Mat	width W		B	Weight	Radius	
		mm	inch	mm	kg/m	mm	inch
S1873TAB-K1200-WBR	steel	304.8	12.00	114	5.50	610	24.02
S1873TAB-K1600-WBR		406	16.00	114	6.00	610	24.02
S1873TAB-K2000-WBR		508	20.00	165	6.50	610	24.02
SS1873TAB-K1200-WBR	stainless steel	304.8	12.00	114	5.50	610	24.02
SS1873TAB-K1600-WBR		406	16.00	114	6.00	610	24.02
SS1873TAB-K2000-WBR		508	20.00	165	6.50	610	24.02

40P &60P series

Plate Material: LF-White
Pin Material: Cold rolled austenitic stainless steel
supply unit : 1.524 m =5ft

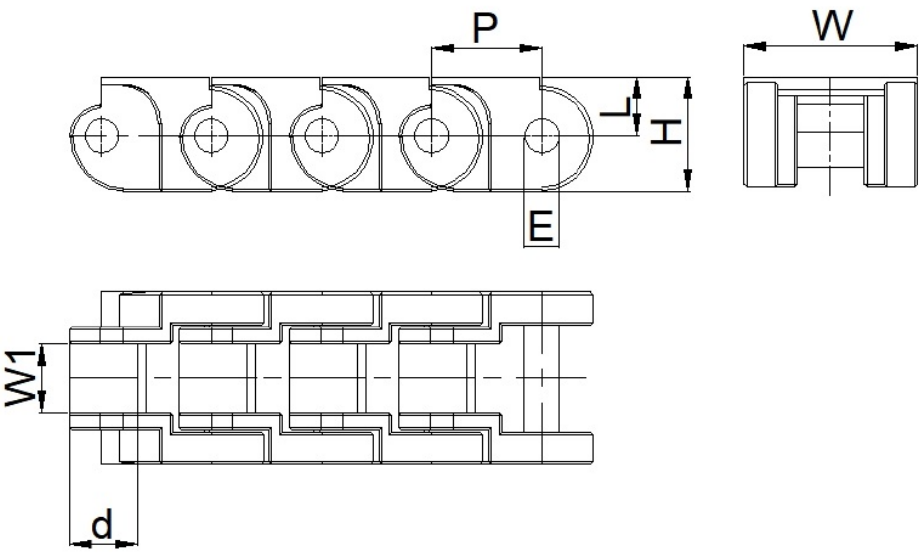

P54

CODE	W (mm)	W1 (mm)	P (mm)	E (mm)	H (mm)	L (mm)	d (mm)
40P	20	7.8	12.7	4	13.2	6.4	7.94
60P	30	13.6	19.05	6	17	9	11

FC series

Plate Material: LF-White
Pin Material: Cold rolled austenitic stainless steel
supply unit : 3.048 m =10ft
or 1 mtr /pc
Average breaking load:2800N

FC70

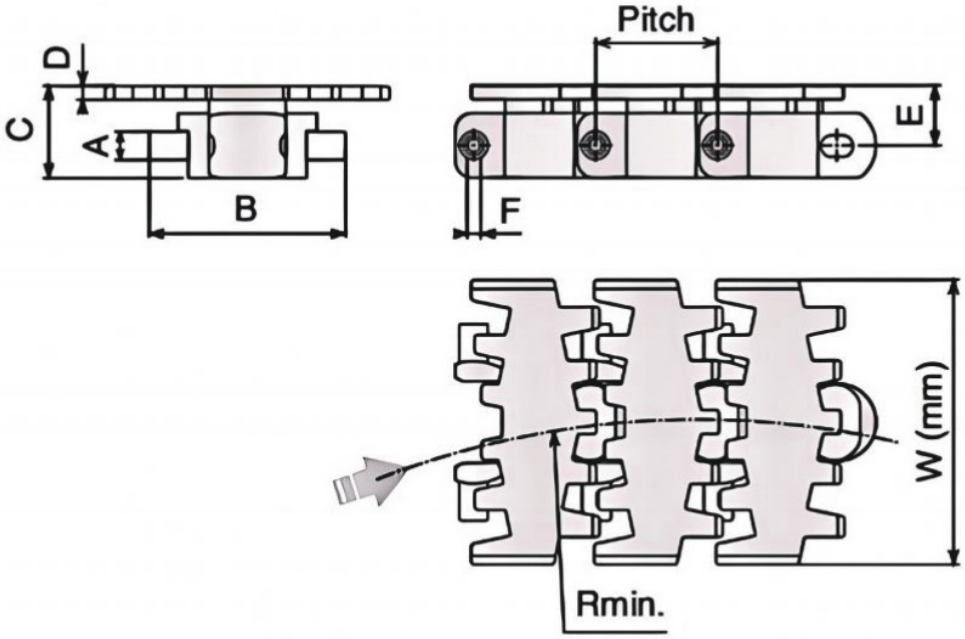

P55-56

ref.No	W(width) mm	A mm	B mm	C mm	D mm	E mm	F mm	Pitch	Weight kg/m	Radius min.
FC63	63	8	37	23	3.5	14.1	4.3	25.4	0.81	150
FC70	70	13.5	43.4	26.5	4	18	7	25.4	1.06	200
FC82.6	82.6	12	58.5	25.5	4.1	16.7	6.4	33.5	1.16	200
FC103	103	11.6	77	25.7	4.4	17	6.4	35.5	1.65	250

Metal-Straight Running

812 Series

Plate Materials: S(SS430) or Stainless Steel(SS304)
Pin Material: Cold rolled austenitic stainless steel

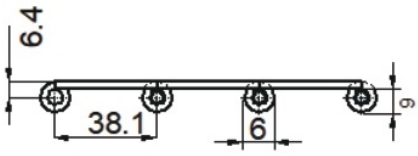

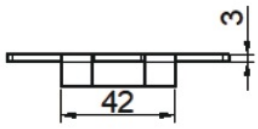

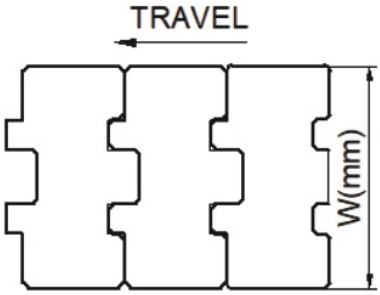

P49 ,P44

	ref.No	Width W		Weight	bfl.Radius		Working Load (N)
		mm	inch	kg/m	mm	inch	
SS430	S812-K300	76.2	3.00	2.40	150	5.9	4250
	S812-K325	82.6	3.25	2.54	150	5.9	
	S812-K350	88.9	3.50	2.68	150	5.9	
	S812-K400	101.6	4.00	2.97	150	5.9	
	S812-K450	114.3	4.50	3.25	150	5.9	
	S812-K500	127	5.00	3.41	150	5.9	
	S812-K600	152.4	6.00	4.09	150	5.9	
	S812-K750	190.5	7.50	4.95	150	5.9	
SS304	SS812-K300	76.2	3.00	2.40	150	5.9	3250
	SS812-K325	82.6	3.25	2.54	150	5.9	
	SS812-K350	88.9	3.50	2.68	150	5.9	
	SS812-K400	101.6	4.00	2.97	150	5.9	
	SS812-K450	114.3	4.50	3.25	150	5.9	
	SS812-K500	127	5.00	3.41	150	5.9	
	SS812-K600	152.4	6.00	4.09	150	5.9	
	SS812-K750	190.5	7.50	4.95	150	5.9	

800 Series

Plate Materials: S(SS430) or Stainless Steel(SS304)
Pin Material: Cold rolled austenitic stainless steel

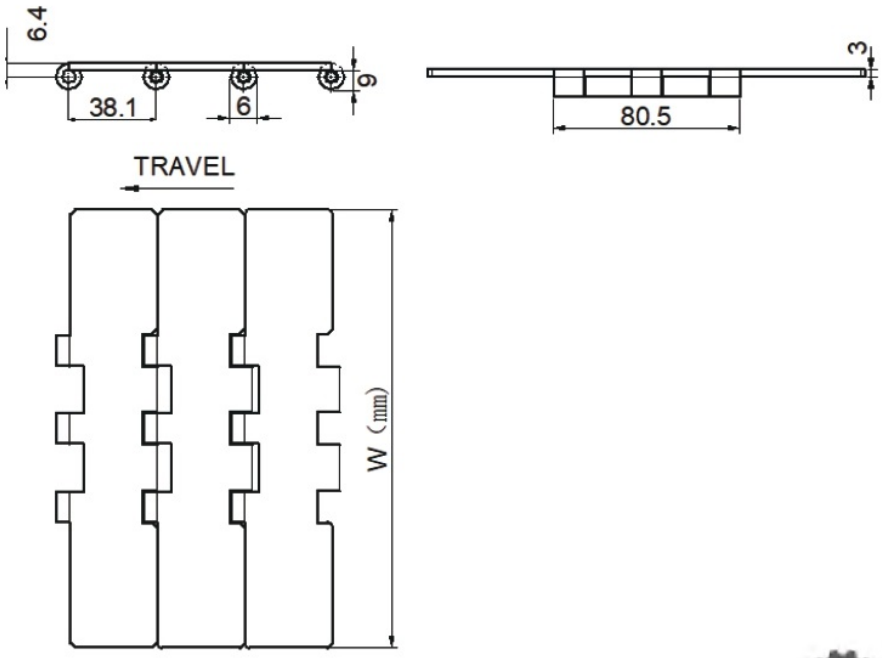

P45 -46

	ref.No	Width W		Weight	bfl.Radius		Working Load (N)
		mm	inch	kg/m	mm	inch	
SS430	S800-K750	190.5	7.5	5.80	50.0	2.0	5800
	S800-K1000	254.0	10.0	7.73	50.0	2.0	
	S800-K1200	304.8	12.0	9.28	50.0	2.0	
SS304	SS800-K750	190.5	7.5	5.80	50.0	2.0	7500
	SS800-K1000	254.0	10.0	7.73	50.0	2.0	
	SS800-K1200	304.8	12.0	9.28	50.0	2.0	

Metal-Side Flexing

881M Series

Plate Materials: S(SS430)
Pin Material: Magnetic Steel

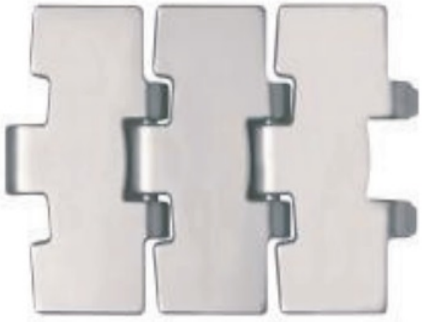

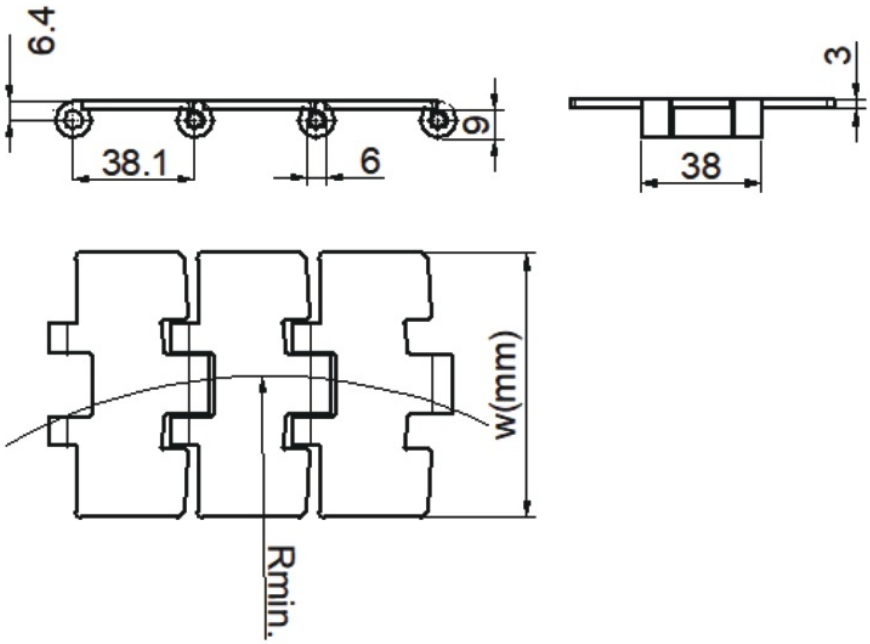


P50

P59

ref.No	Width W		Weight	bfl.Radius		Radius		Working Load (N)
	mm	inch	kg/m	mm	inch	mm	inch	
S881M-K325	82.6	3.25	2.4	75.0	3.0	460.0	18.11	4250
S881M-K450	114.3	4.50	3.2	75.0	3.0	460.0	18.11	
S881M-K600	152.4	6.00	4.4	75.0	3.0	460.0	18.11	
S881M-K750	190.5	7.50	4.9	75.0	3.0	460.0	18.11	

Metal-Side Flexing

881TAB Series

Plate Materials: S(SS430) or Stainless Steel(SS304)
Pin Material: Cold rolled austenitic stainless steel

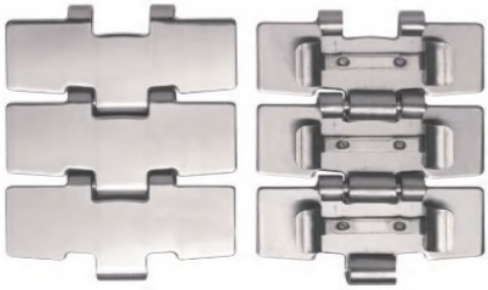

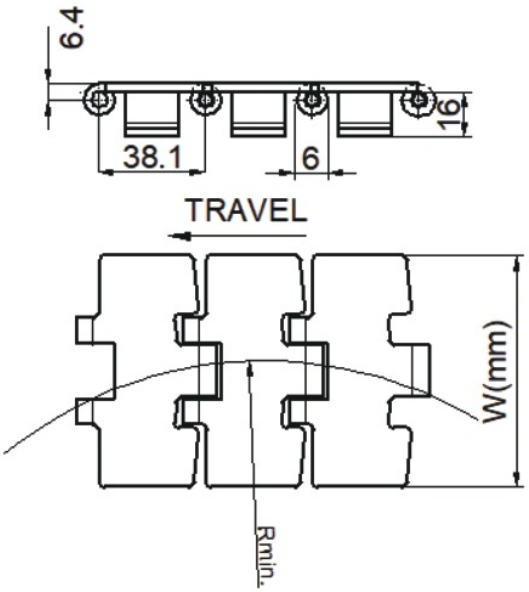

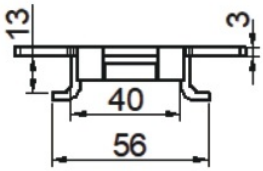


P50


P57

	ref.No	Width W		Weight	bfl.Radius		Radius		Working Load (N)
		mm	inch	kg/m	mm	inch	mm	inch	
SS430	S881TAB-K325	82.6	3.25	3.2	75.0	3.0	460.0	18.11	4800
	S881TAB-K450	114.3	4.50	3.9	75.0	3.0	610.0	24.00	
	S881TAB-K600	152.4	6.00	4.6	75.0	3.0	610.0	24.00	
	S881TAB-K750	190.5	7.50	5.7	75.0	3.0	610.0	24.00	
	S881TAB-K1000	254.0	10.00	7.5	75.0	3.0	610.0	24.00	
	S881TAB-K1200	304.8	12.00	8.9	75.0	3.0	610.0	24.00	
SS304	SS881TAB-K325	82.6	3.25	3.2	75.0	3.0	460.0	18.11	2950
	SS881TAB-K450	114.3	4.50	3.9	75.0	3.0	610.0	24.00	
	SS881TAB-K600	152.4	6.00	4.6	75.0	3.0	610.0	24.00	
	SS881TAB-K750	190.5	7.50	5.7	75.0	3.0	610.0	24.00	
	SS881TAB-K1000	254.0	10.00	7.5	75.0	3.0	610.0	24.00	
	SS881TAB-K1200	304.8	12.00	8.9	75.0	3.0	610.0	24.00	

Metal-Straight Running

Steel chain with rubber Series

Plate Materials: Steel(S)
Rubber Material:Natural
Pin Material: Cold rolled austenitic stainless steel

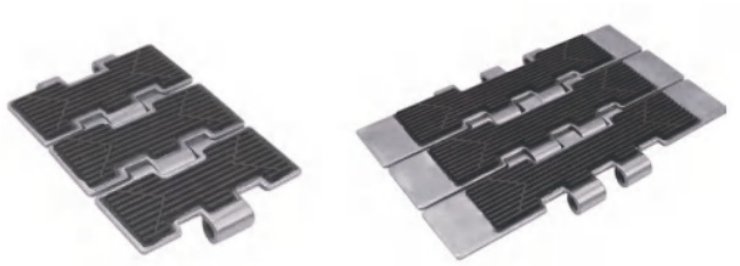

S812

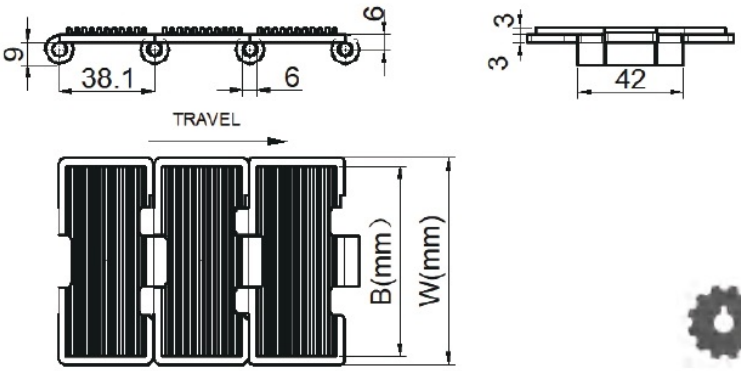

P49,P44

S800

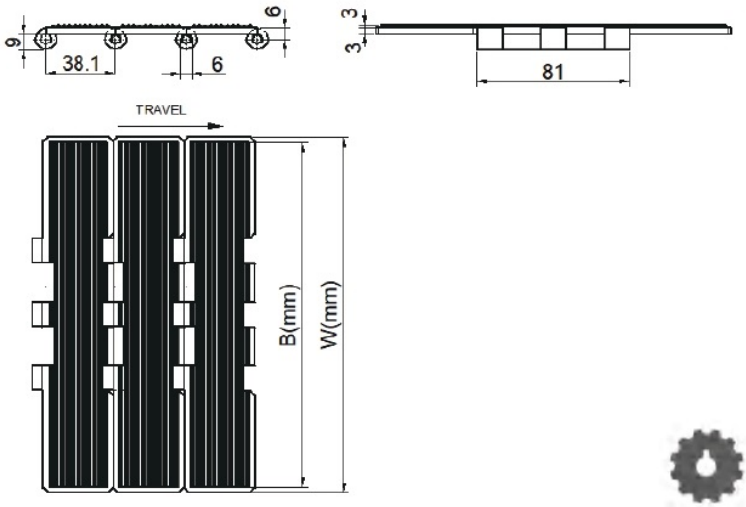

P45 - 46

ref.No	Width W		Weight	bfl.Radius		Working Load (N)
	mm	inch	kg/m	mm	inch	
S812-k325WB	82.6	3.3	2.70	150.0	5.9	4250
S800-K750WB	190.5	7.5	5.80	50.0	2.0	7500

Sprockets

for 820 series

Machined sprockets

Material: PA

Wear resistance and high performance

Screws in stainless steel -- split type

Bushings in brass

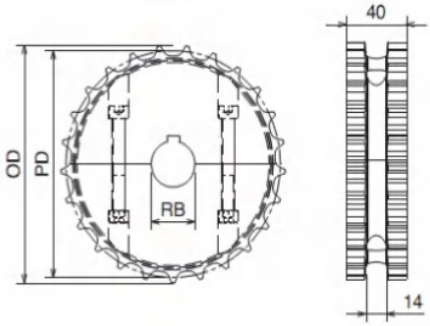

Sprocket Code	Number of Teeth	RB	PD	OD	Hub Dia
		mm	mm	mm	mm
Split,Machined Drive Sprockets - 820					
820T19RB20-01-ST	19	20	115.7	117.0	40
820T19RB25-01-ST		25			
820T19RB30-01-ST		30			
820T19RB35-01-ST		35			
820T21RB25-01-ST	21	25	127.8	129.0	
820T21RB30-01-ST		30			
820T21RB35-01-ST		35			
820T21RB40-01-ST		40			
820T23RB25-01-ST	23	25	139.9	140.7	
820T23RB30-01-ST		30			
820T23RB35-01-ST		35			
820T23RB40-01-ST		40			
820T25RB25-01-ST	25	20	152.0	153.0	
820T25RB30-01-ST		25			
820T25RB35-01-ST		30			
820T25RB40-01-ST		35			

Not split (one piece) pls remove "-ST " ,for example 820T21RB35-01

Molded sprockets

Material: PA-Black

Screws in stainless steel

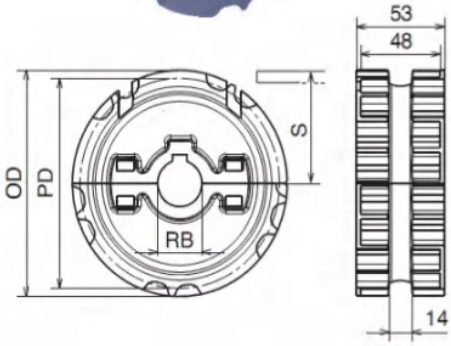

Sprocket Code	Number of Teeth	RB	PD	OD	Hub Diamater
		mm	mm	mm	mm
Split, Molded Drive Sprockets - 820					
820T19RB25-03	19	25	115.7	117.0	53
820T19RB30-03		30			
820T19RB35-03		35			
820T21RB25-03	21	25	127.8	129.0	
820T21RB30-03		30			
820T21RB35-03		35			
820T23RB25-03	23	25	139.9	140.7	
820T23RB30-03		30			
820T23RB35-03		35			
820T23RB40-03		40			
820T25RB25-03	25	25	152.0	153.0	
820T25RB30-03		30			
820T25RB35-03		35			
820T25RB40-03		40			

Idler wheels for 820 ,812 series

Machined idlers

Material: PA

Wear resistance and high performance

Screws in stainless steel -- split type

Bushings in brass

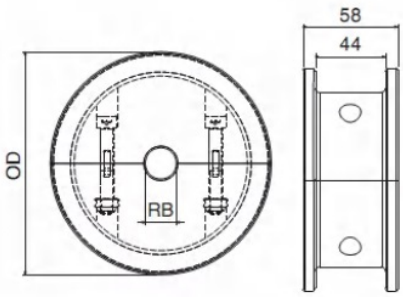

Idler Code	Equivalent Tooth size	RB	OD	Hub Diamater
		mm	mm	mm
Split ,Machined Idler Wheels - 820				
820T19RB20-02-ST	19	20	117.0	58
820T19RB25-02-ST		25		
820T19RB30-02-ST		30		
820T19RB35-02-ST		35		
820T21RB25-02-ST	21	25	129.0	
820T21RB30-02-ST		30		
820T21RB35-02-ST		35		
820T21RB40-02-ST		40		
820T23RB25-02-ST	23	25	140.7	
820T23RB30-02-ST		30		
820T23RB35-02-ST		35		
820T23RB40-02-ST		40		
820T25RB25-02-ST	25	20	153.0	
820T25RB30-02-ST		25		
820T25RB35-02-ST		30		
820T25RB40-02-ST		35		

Not split (one piece) pls remove "-ST " ,for example 820T21RB30-02

Molded idler wheels

Material: PA-Black

Screws in stainless steel

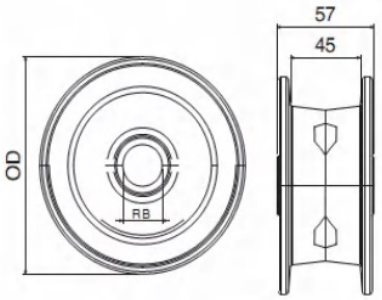

Idler Code	Equivalent Tooth size	RB	OD	Hub Diamater
		mm	mm	mm
Split, Molded Idler Wheels - 820				
820T19RB25-04	19	25	117.0	57
820T19RB30-04		30		
820T19RB35-04		35		
820T21RB25-04	21	25	129.0	
820T21RB30-04		30		
820T21RB35-04		35		
820T23RB25-04	23	25	140.7	
820T23RB30-04		30		
820T23RB35-04		35		
820T25RB25-04	25	25	153.0	
820T25RB30-04		30		
820T25RB35-04		35		
820T25RB40-04		40		

Sprocket

Sprockets for 821,800 ,LBP821series

Machined sprockets

Material: PA

Wear resistance and high performance

Screws in stainless steel -- split type

Bushings in brass

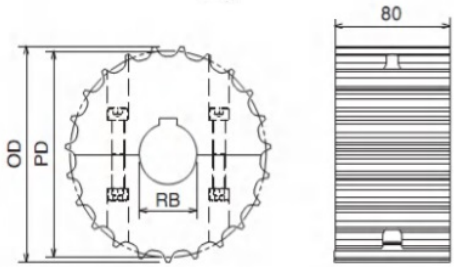

Sprocket Code	Number of Teeth	RB	PD	OD	Hub Diamater
		mm	mm	mm	mm
Split,Machined Drive sprockets - 821					
821T19RB25-01-ST	19	25	115.7	117.0	80
821T19RB30-01-ST		30			
821T19RB35-01-ST		35			
821T21RB25-01-ST	21	25	127.8	129.0	
821T21RB30-01-ST		30			
821T21RB35-01-ST		35			
821T21RB40-01-ST		40			
821T23RB25-01-ST	23	25	139.9	140.7	
821T23RB30-01-ST		30			
821T23RB35-01-ST		35			
821T23RB40-01-ST		40			
821T25RB25-01-ST	25	25	152.0	153.0	
821T25RB30-01-ST		30			
821T25RB35-01-ST		35			
821T25RB40-01-ST		40			

Not split (one piece) pls remove "-ST" ,for example 821T21RB30-01

Idler wheels

for 821,LBP821series

Machined idler wheels

Material: PA

Wear resistance and high performance

Screws in stainless steel -- split type

Bushings in brass

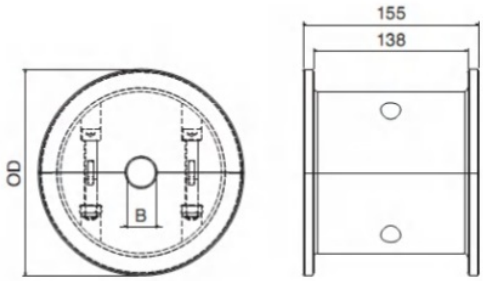

Idler Code	Equivalent Tooth size	RB	OD	Hub Diamater
		mm	mm	mm
Split ,Machined Idler Wheels - 821				
821T19RB25-02-ST	19	25	117.0	155
821T19RB30-02-ST		30		
821T19RB35-02-ST		35		
821T21RB25-02-ST	21	25	129.0	
821T21RB30-02-ST		30		
821T21RB35-02-ST		35		
821T21RB40-02-ST		40		
821T23RB25-02-ST	23	25	140.7	
821T23RB30-02-ST		30		
821T23RB35-02-ST		35		
821T23RB40-02-ST		40		
821T25RB25-02-ST	25	25	153.0	
821T25RB30-02-ST		30		
821T25RB35-02-ST		35		
821T25RB40-02-ST		40		

Not split (one piece) pls remove "-ST",for example 821T21RB30-02

Idler wheels

Idler wheels for 800 series

Machined idler wheels

Material: PA

Wear resistance and high performance

Screws in stainless steel -- split type

Bushings in brass

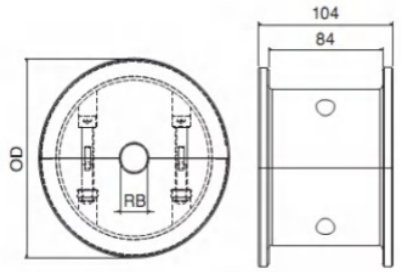

Idler Code	Equivalent Tooth size	RB	OD	Hub Diamater
		mm	mm	mm
Split ,Machined Idler Wheels - 800				
800T19RB25-02-ST	19	25	117.0	155
800T19RB30-02-ST		30		
800T19RB35-02-ST		35		
800T21RB25-02-ST	21	25	129.0	
800T21RB30-02-ST		30		
800T21RB35-02-ST		35		
800T21RB40-02-ST		40		
800T23RB25-02-ST	23	25	140.7	
800T23RB30-02-ST		30		
800T23RB35-02-ST		35		
800T23RB40-02-ST		40		
800T25RB25-02-ST	25	20	153.0	
800T25RB30-02-ST		25		
800T25RB35-02-ST		30		
800T25RB40-02-ST		35		

Not split (one piece) pls remove "-ST" ,for example 800T21RB30-02

Sprockets for 60P series

Machined sprockets

Material: PA

Wear resistance and high performance

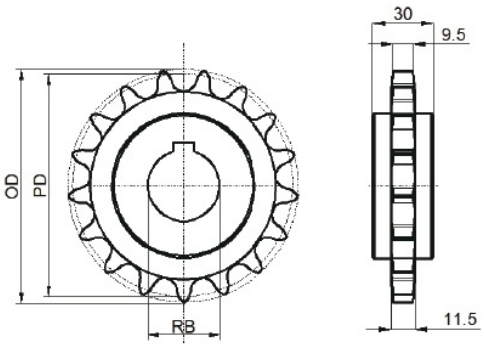

Sprocket Code	Number of Teeth	Round Bore	Pitch Diameter	Outside Diameter	Hub Dia
		mm	mm	mm	mm
Machined Sprockets - 60P					
60PT12RB20-01	12	20	73.0	82.8	30
60PT12RB25-01		25			
60PT12RB30-01		30			
60PT15RB20-01	15	20	90.9	100.4	
60PT15RB25-01		25			
60PT15RB30-01		30			
60PT17RB20-01	17	25	102.9	112.4	
60PT17RB25-01		30			
60PT17RB30-01		35			
60PT20RB20-01	20	25	120.8	131.2	
60PT20RB25-01		30			
60PT20RB30-01		35			
60PT20RB20-01	25	25	150.8	160.9	
60PT25RB25-01		30			
60PT25RB30-01		35			

Sprockets for 828, 880TAB,880B ,880M,880TAB-BO series

Machined sprockets

Material: PA

Wear resistance and high performance

Screws in stainless steel -- split type

Bushings in brass

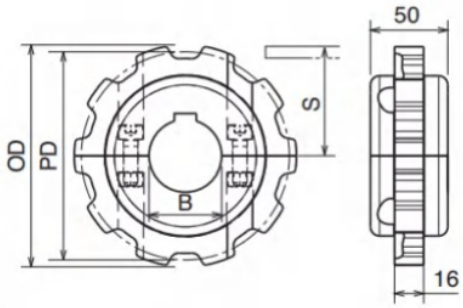

Sprocket Code	Number of Teeth	RB	PD	OD	Hub Diamater
		mm	mm	mm	mm
Split,Machined Drive Sprockets - 880					
880T10RB20-01-ST	10	20	123.3	122.4	40
880T10RB25-01-ST		25			
880T10RB30-01-ST		30			
880T10RB35-01-ST		35			
880T10RB40-01-ST		40			
880T11RB20-01-ST	11	20	135.2	134.9	
880T11RB25-01-ST		25			
880T11RB30-01-ST		30			
880T11RB35-01-ST		35			
880T11RB40-01-ST		40			
880T12RB20-01-ST	12	20	147.2	147.3	
880T12RB25-01-ST		25			
880T12RB30-01-ST		30			
880T12RB35-01-ST		35			
880T12RB40-01-ST		40			

Not split (one piece) pls remove "-ST" ,for example 880T11RB25-01

Molded sprockets

Material: PA-Black

Screws in stainless steel

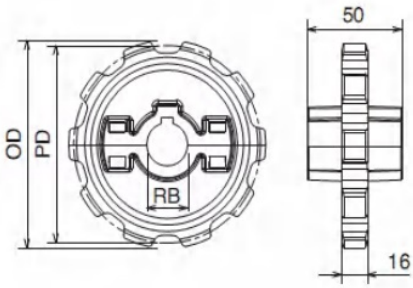

Sprocket Code	Number of Teeth	RB	PD	OD	Hub Diamater
		mm	mm	mm	mm
Split, Molded Drive Sprockets - 880					
880T10RB20-03	10	20	123.3	122.4	50
880T10RB25-03		25			
880T10RB30-03		30			
880T10RB35-03		35			
880T10RB40-03		40			
880T11RB20-03	11	20	135.2	134.9	
880T11RB25-03		25			
880T11RB30-03		30			
880T11RB35-03		35			
880T11RB40-03		40			
880T12RB20-03	12	20	147.2	147.3	
880T12RB25-03		25			
880T12RB30-03		30			
880T12RB35-03		35			
880T12RB40-03		40			

Sprockets for 882TAB ,LBP882series

Machined sprockets

Material: PA

Wear resistance and high performance

Screws in stainless steel -- split type

Bushings in brass

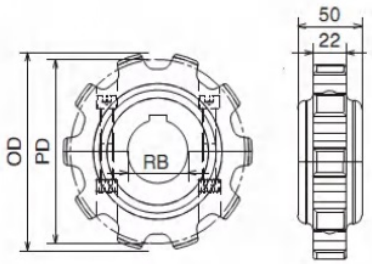

Sprocket Code	Number of Teeth	RB	Pitch Diameter	Outside Diameter	Hub Diamater
		mm	mm	mm	mm
Split,Machined Drive Sprockets - 882					
882T10RB20-01-ST	10	20	123.3	122.4	50
882T10RB25-01-ST		25			
882T10RB30-01-ST		30			
882T10RB35-01-ST		35			
882T10RB40-01-ST		40			
882T11RB20-01-ST	11	20	135.2	134.9	
882T11RB25-01-ST		25			
882T11RB30-01-ST		30			
882T11RB35-01-ST		35			
882T11RB40-01-ST		40			
882T12RB20-01-ST	12	20	147.2	147.3	
882T12RB25-01-ST		25			
882T12RB30-01-ST		30			
882T12RB35-01-ST		35			
882T12RB40-01-ST		40			

Not split (one piece) pls remove "-ST" ,for example 882T11RB25-01

Molded sprockets

Material: PA-Black

Screws in stainless steel

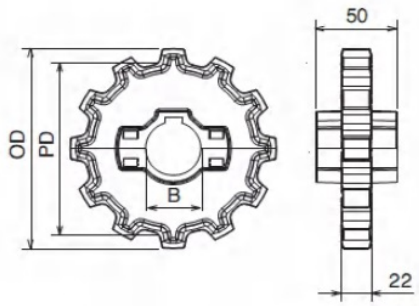

Sprocket Code	Number of Teeth	RB	Pitch Diameter	Outside Diameter	Hub Diamater
		mm	mm	mm	mm
Split, Molded Drive Sprockets - 882					
882T10RB20-03	10	20	123.3	122.4	50
882T10RB25-03		25			
882T10RB30-03		30			
882T10RB35-03		35			
882T10RB40-03		40			
882T11RB20-03	11	20	135.2	134.9	
882T11RB25-03		25			
882T11RB30-03		30			
882T11RB35-03		35			
882T11RB40-03		40			
882T12RB20-03	12	20	147.2	147.3	
882T12RB25-03		25			
882T12RB30-03		30			
882T12RB35-03		35			
882T12RB40-03		40			

Sprockets for 812 series

Machined sprockets

Material: PA

Wear resistance and high performance

Screws in stainless steel -- split type

Bushings in brass

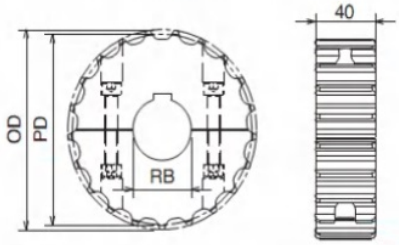

Sprocket Code	Number of Teeth	RB	PD	OD	Hub Dia
		mm	mm	mm	mm
Split ,Machined Drive Sprockets - 812					
812T19RB20-01-ST	19	20	115.7	117.0	40
812T19RB25-01-ST		25			
812T19RB30-01-ST		30			
812T19RB35-01-ST		35			
812T21RB25-01-ST	21	25	127.8	129.0	
812T21RB30-01-ST		30			
812T21RB35-01-ST		35			
812T21RB40-01-ST		40			
812T23RB25-01-ST	23	25	139.9	140.7	
812T23RB30-01-ST		30			
812T23RB35-01-ST		35			
812T23RB40-01-ST		40			
812T25RB25-01-ST	25	25	152.0	153.0	
812T25RB30-01-ST		30			
812T25RB35-01-ST		35			
812T25RB40-01-ST		40			

Not split (one piece) pls remove "-ST " ,for example 812T19RB20-01

Molded sprockets

Material: PA-Black

Screws in stainless steel

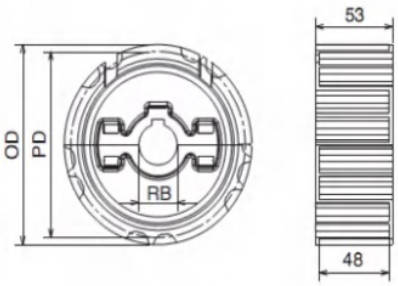

Sprocket Code	Number of Teeth	RB	PD	OD	Hub Dia
		mm	mm	mm	mm
Split, Molded Drive Sprockets - 812					
812T19RB25-03	19	25	115.7	117.0	53
812T19RB30-03		30			
812T19RB35-03		35			
812T21RB25-03	21	25	127.8	129.0	
812T21RB30-03		30			
812T21RB35-03		35			
812T23RB25-03	23	25	139.9	140.7	
812T23RB30-03		30			
812T23RB35-03		35			
812T23RB40-03		40			
812T25RB25-03	25	25	152.0	153.0	
812T25RB30-03		30			
812T25RB35-03		35			
812T25RB40-03		40			

Sprockets for 881M,881,881TAB series

Machined sprockets

Material: PA

Wear resistance and high performance

Screws in stainless steel -- split type

Bushings in brass

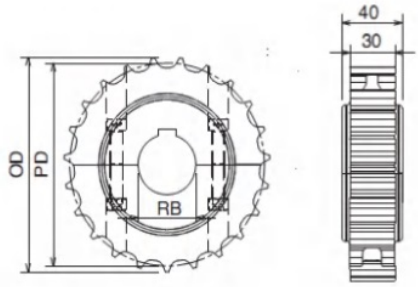

Sprocket Code	Number of Teeth	RB	PD	OD	Hub Diamater
		mm	mm	mm	mm
Split ,Machined Drive sprockets - 881					
881T19RB20-01-ST	19	20	115.7	117.0	40
881T19RB25-01-ST		25			
881T19RB30-01-ST		30			
881T19RB35-01-ST		35			
881T21RB25-01-ST	21	25	127.8	129.0	
881T21RB30-01-ST		30			
881T21RB35-01-ST		35			
881T21RB40-01-ST		40			
881T23RB25-01-ST	23	25	139.9	140.7	
881T23RB30-01-ST		30			
881T23RB35-01-ST		35			
881T23RB40-01-ST		40			
881T25RB25-01-ST	25	20	152.0	153.0	
881T25RB30-01-ST		25			
881T25RB35-01-ST		30			
881T25RB40-01-ST		35			

Not split (one piece) pls remove "-ST " ,for example 881T23RB35-01

Idler wheels

Molded sprockets

Material: PA-Black

Screws in stainless steel

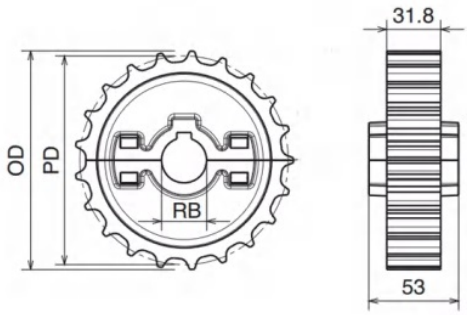

Sprocket Code	Number of Teeth	RB	PD	OD	Hub Diamater
		mm	mm	mm	mm
Split ,Molded Drive sprockets - 881					
3-881-19-20	19	20	115.7	117.0	40
3-881-19-25		25			
3-881-19-30		30			
3-881-19-35		35			
3-881-21-25	21	25	127.8	129.0	
3-881-21-30		30			
3-881-21-35		35			
3-881-21-40		40			
3-881-23-25	23	25	139.9	140.7	
3-881-23-30		30			
3-881-23-35		35			
3-881-23-40		40			
3-881-25-25	25	20	152.0	153.0	
3-881-25-30		25			
3-881-25-35		30			
3-881-25-40		35			

Sprockets for 1060 series

Machined sprockets

Material: PA

Wear resistance and high performance

Screws in stainless steel -- split type

Bushings in brass

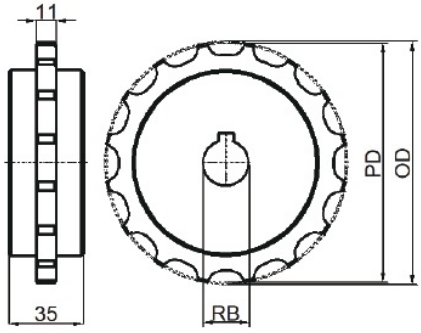

Sprocket Code	Number of Teeth	RB	Pitch Diameter	Outside Diameter	Hub Diamater
		mm	mm	mm	mm
Machined Drive Sprockets - 1060					
1060T16RB25-01	16	25	131.2	130.9	40
1060T16RB30-01		30			
1060T16RB35-01		35			
1060T16RB40-01		40			
1060T18RB25-01	18	25	147.4	146.8	
1060T18RB30-01		30			
1060T18RB35-01		35			
1060T18RB40-01		40			
1060T21RB25-01	21	25	171.7	170.7	
1060T21RB30-01		30			
1060T21RB35-01		35			
1060T21RB40-01		40			

Sprockets for RT114 series

Machined sprockets

Material: PA

Wear resistance and high performance

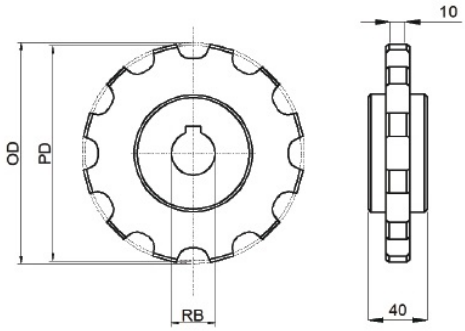

Sprocket Code	Number of Teeth	RB	Pitch Diameter	Outside Diameter	Hub Diamater
		mm	mm	mm	mm
Machined Drive Sprockets - RT114					
RT114T10RB20-01	10	20	123.9	123.0	40
RT114T10RB25-01		25			
RT114T10RB30-01		30			
RT114T10RB35-01		35			
RT114T12RB25-01	12	25	148.0	147.0	
RT114T12RB30-01		30			
RT114T12RB35-01		35			
RT114T12RB40-01		40			
RT114T15RB25-01	15	25	184.0	183.3	
RT114T15RB30-01		30			
RT114T15RB35-01		35			
RT114T15RB40-01		40			

Sprockets for 1701,1702,1703,1765 series

Machined sprockets

Material: PA

Wear resistance and high performance

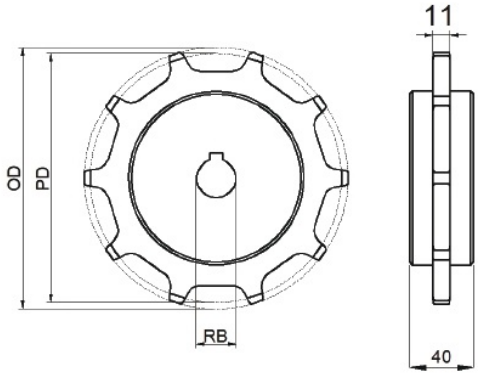

Sprocket Code	Number of Teeth	RB	Pitch Diameter	Outside Diameter	Hub Diamater
		mm	mm	mm	mm
Machined Drive Sprockets - 1701					
1701T8RB25-01	8	25	130.6	135.0	40
1701T8RB30-01		30			
1701T8RB35-01		35			
1701T10RB25-01	10	25	161.8	165.0	
1701T10RB30-01		30			
1701T10RB35-01		35			
1701T10RB40-01		40			
1701T12RB25-01	12	25	193.1	197.6	
1701T12RB30-01		30			
1701T12RB35-01		35			
1701T12RB40-01		40			
1701T13RB25-01	13	25	208.9	213.8	
1701T13RB30-01		30			
1701T13RB35-01		35			
1701T13RB40-01		40			

Sprockets for 600 series

Machined sprockets

Material: PA

Wear resistance and high performance

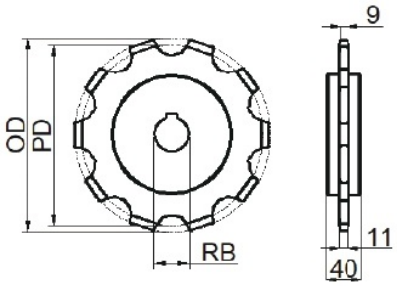

Sprocket Code	Number of Teeth	RB	Pitch Diameter	Outside Diameter	Hub Diamater
		mm	mm	mm	mm
Machined Drive Sprockets - 600					
600T8RB25-01	8	25	168.8	179.8	40
600T8RB30-01		30			
600T8RB35-01		35			
600T10RB25-01	10	25	208.7	218.6	
600T10RB30-01		30			
600T10RB35-01		35			
600T10RB40-01		40			
600T11RB25-01	11	25	228.9	238.8	
600T11RB30-01		30			
600T11RB35-01		35			
600T11RB40-01		40			
600T12RB25-01	12	25	249.2	259.1	
600T12RB30-01		30			
600T12RB35-01		35			
600T12RB40-01		40			

Sprocket

Sprockets for 1400 series

Machined sprockets

Material: PA

Wear resistance and high performance

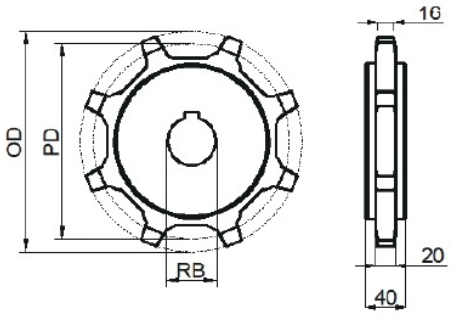

Sprocket Code	Number of Teeth	RB	Pitch Diameter	Outside Diameter	Hub Diamater
		mm	mm	mm	mm
Machined Drive Sprockets - 1400					
1400T8RB25-01	8	25	168.8	179.8	40
1400T8RB30-01		30			
1400T8RB35-01		35			
1400T10RB25-01	10	25	208.7	218.6	
1400T10RB30-01		30			
1400T10RB35-01		35			
1400T10RB40-01		40			
1400T11RB25-01	11	25	228.9	238.8	
1400T11RB30-01		30			
1400T11RB35-01		35			
1400T11RB40-01		40			
1400T12RB25-01	12	25	249.2	259.1	
1400T12RB30-01		30			
1400T12RB35-01		35			
1400T12RB40-01		40			

Machined sprockets

Material: PA

Wear resistance and high performance

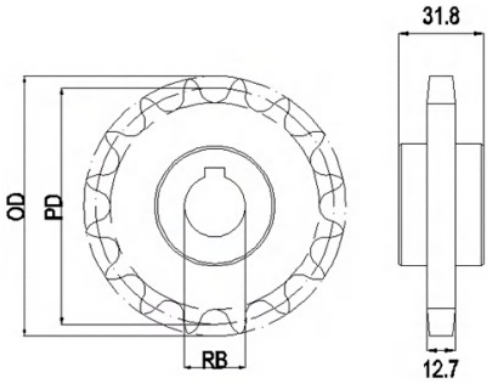

Sprocket

Sprockets for 1100P series

Teeth No	OD	Round Bore
9	74	20/25
10	82	20/25/30
11	90	20/25/30
12	98	20/25/30/40
14	114	20/25/30/40
15	122	20/25/30/40
16	130	20/25/30/40
17	138	20/25/30/40
19	154	20/25/30/40

Sprockets for 1843TAB ,40P series

Machined sprockets

Material: PA

Wear resistance and high performance

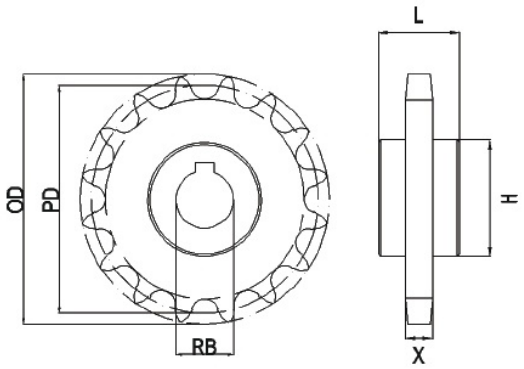

Teeth No	OD	PD	X	L	H	Round Bore
15	67	61.08	7.2	22	40	20/25
17	76	69.12	7.2	22	40	20/25
19	84	77.16	7.2	22	40	20/25
21	92	85.21	7.2	22	60	20/25/30
23	100	93.27	7.2	22	60	20/25/30
25	108	101.33	7.2	22	60	20/25/30/35
27	116	109.4	7.2	22	70	20/25/30/40
29	124	117.46	7.2	22	70	20/25/30/40
31	133	125.53	7.2	28	70	20/25/30/40
33	141	133.61	7.2	28	100	20/25/30/40

Sprockets for 1873TAB SERIES

Machined sprockets

Material: PA

Wear resistance and high performance

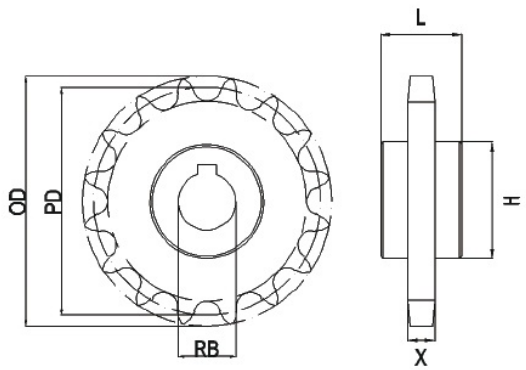

Teeth No	OD	PD	X	L	H	Round Bore
15	101	79.21	11.5	30	50	20/25/30
17	113	91.32	11.5	30	50	20/25/30
19	126	103.43	11.5	30	50	20/25/30
21	138	155.55	11.5	32	70	20/25/30/40
23	150	127.67	11.5	32	70	20/25/30/40
25	162	139.79	11.5	32	70	20/25/30/40
27	174	151.9	11.5	35	100	20/25/30/40
29	187	164.03	11.5	35	100	20/25/30/40
31	199	176.15	11.5	35	100	20/25/30/40

Machined sprockets - FC63

Material: PA

Wear resistance and high performance

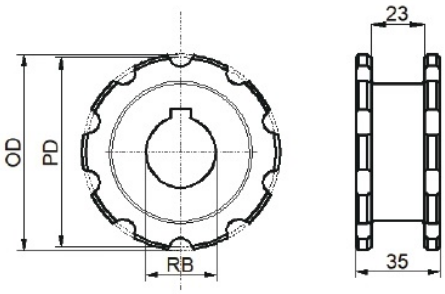

Sprocket Code	Number of Teeth	Round Bore	Pitch Diameter	Outside Diameter	Hub Dia
		mm	mm	mm	mm
Machined Drive Sprockets - FC63					
FC63T8RB25-01	8	25	66.3	66.6	35
FC63T8RB30-01		30			
FC63T8RB35-01		35			
FC63T8RB41-01		40			
FC63T9RB25-01	9	25	74.3	74.6	
FC63T9RB30-01		30			
FC63T9RB35-01		35			
FC63T9RB41-01		40			
FC63T10RB25-01	10	25	82.2	82.5	
FC63T10RB30-01		30			
FC63T10RB35-01		35			
FC63T10RB41-01		40			
FC63T11RB25-01	11	25	90.1	90.5	
FC63T11RB30-01		30			
FC63T11RB35-01		35			
FC63T11RB41-01		40			

Machined sprockets - FC70 & 1775

Material: PA

Wear resistance and high performance

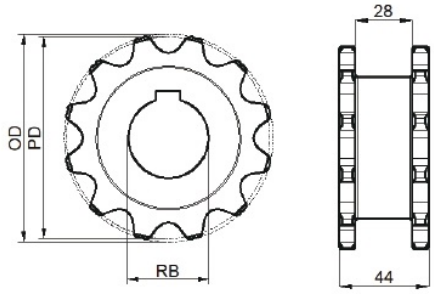

Sprocket Code	Number of Teeth	Round Bore	Pitch Diameter	Outside Diameter	Hub Diamat
		mm	mm	mm	mm
Machined Drive Sprockets - FC70					
FC70T10RB25-01	10	25	80.9	88.0	44
FC70T10RB30-01		30			
FC70T10RB35-01		35			
FC70T12RB25-01	12	25	96.6	103.1	
FC70T12RB30-01		30			
FC70T12RB35-01		35			
FC70T12RB40-01		40			
FC70T14RB25-01	14	25	122.3	118.5	
FC70T14RB30-01		30			
FC70T14RB35-01		35			
FC70T14RB40-01		40			
FC70T16RB25-01	16	25	128.1	134.0	
FC70T16RB30-01		30			
FC70T16RB35-01		35			
FC70T16RB40-01		40			

Sprockets for FC series

Machined sprockets - FC82.6

Material: PA

Wear resistance and high performance

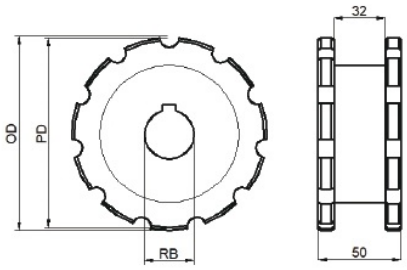

Sprocket Code	Number of Teeth	RoundBore	Pitch Diameter	Outside Diameter	Hub Diamat
		mm	mm	mm	mm
Machined Drive Sprockets - FC82.6					
FC82.6T9RB25-01	9	25	96.5	97.1	50
FC82.6T9RB30-01		30			
FC82.6T9RB35-01		35			
FC82.6T9RB40-01		40			
FC82.6T10RB25-01	10	25	106.8	1072.0	
FC82.6T10RB30-01		30			
FC82.6T10RB35-01		35			
FC82.6T10RB40-01		40			
FC82.6T11RB25-01	11	25	117.1	117.7	
FC82.6T11RB30-01		30			
FC82.6T11RB35-01		35			
FC82.6T11RB40-01		40			
FC82.6T12RB25-01	12	25	127.5	128.1	
FC82.6T12RB30-01		30			
FC82.6T12RB35-01		35			
FC82.6T12RB40-01		40			

Machined sprockets - FC103

Material: PA

Wear resistance and high performance

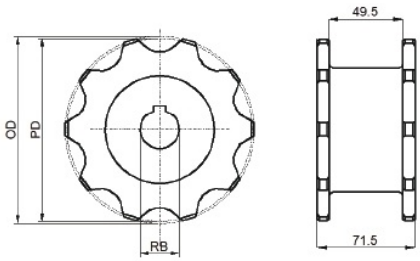

Sprocket Code	Number of Teeth	RoundBore	Pitch Diameter	Outside Diameter	Hub Diamat
		mm	mm	mm	mm
Machined Drive Sprockets - FC-103					
FC103T9RB25-01	9	25	140.7	110.9	64
FC103T9RB30-01		30			
FC103T9RB35-01		35			
FC103T9RB40-01		40			
FC103T10RB25-01	10	25	115.6	122.1	
FC103T10RB30-01		30			
FC103T10RB35-01		35			
FC103T10RB40-01		40			
FC103T11RB25-01	11	25	127.1	133.3	
FC103T11RB30-01		30			
FC103T11RB35-01		35			
FC103T11RB40-01		40			
FC103T12RB25-01	12	25	138.3	145.5	
FC103T12RB30-01		30			
FC103T12RB35-01		35			
FC103T12RB40-01		40			

Corner Track

Chain type 880TAB,SS881TAB,783T series

Material :UHMWPE
Color :Black
Standard α= 90°
Other α=15°，30°，45°，60°.

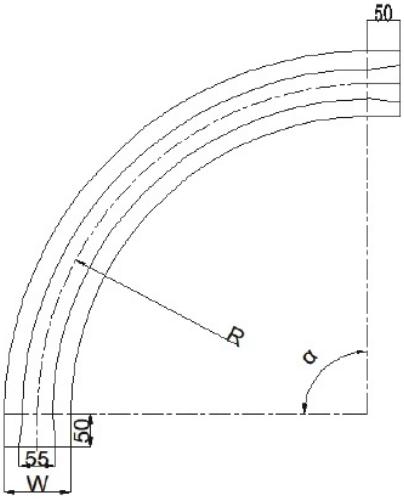

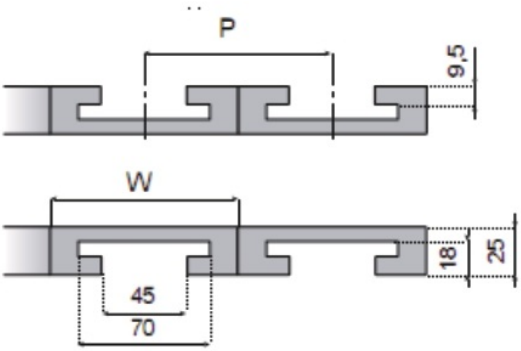

ref.No	P	no of row	W	R500	R610
				Code	
880TAB-K325 SS881TAB-K325 783T-K330	85	1	100	CT880TK325-R500-100-1	CT880TK325-R610-100-1
		2	185	CT880TK325-R500-185-2	CT880TK325-R610-185-2
		3	270	CT880TK325-R500-270-3	CT880TK325-R610-270-3
		4	355	CT880TK325-R500-355-4	CT880TK325-R610-355-4
880TAB-K450 881TAB-K450 783T-K450	120	1	130	CT880TK450-R500-130-1	CT880TK450-R610-130-1
		2	250	CT880TK450-R500-250-2	CT880TK450-R610-250-2
		3	370	CT880TK450-R500-370-3	CT880TK450-R610-370-3
		4	490	CT880TK450-R500-490-4	CT880TK450-R610-490-4
SS881TAB-K600	160	1	160	-	CT881TK600-R610-160-1
		2	320	-	CT881TK600-R610-320-2
SS881TAB-K750	200	1	200	-	CT881TK750-R610-200-1
		2	400	-	CT881TK750-R610-400-2
SS881TAB-K1000	270	1	270	-	CT881TK1000-R610-260-1
SS881TAB-K1200	320	1	320	-	CT881TK1200-R610-320-1

*if α=45°，pls mention CT880TK325-R500-100-1-45°

Corner Track

Chain type 882TAB,LBP882 series

Material :UHMWPE
Color :Black
Standard α= 90°
Other α=15°，30°，45°，60°.

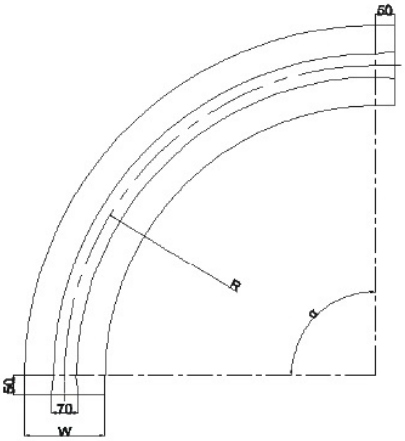

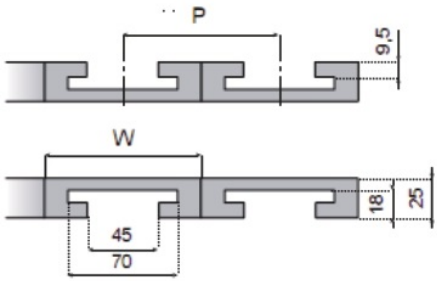

ref.No	P	no of row	W	R610 Code
882TAB-K600	160	1	160	CT882TK600-R610-160-1
		2	320	CT882TK600-R610-320-2
882TAB-K750	200	1	200	CT882TK750-R610-200-1
		2	400	CT882TK750-R610-400-2
882TAB-K1000	270	1	270	CT882TK1000-R610-270-1
882TAB-K1200	320	1	320	CT882TK1200-R610-320-1

*if α=45°，pls mention CT882TK600-R610-160-1-45°

Corner Track

Chain type 880B series

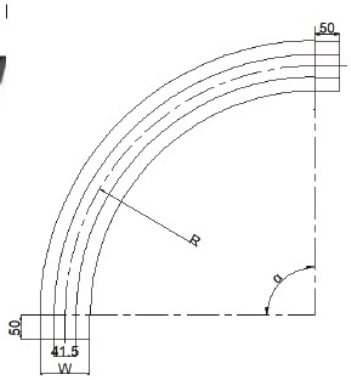

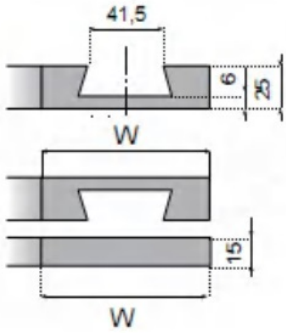

ref.No	no of row	R500	R610
		Code	
880B-K325	1	CT880K325-R500-100-1	CT880K325-R610-100-1
880B-K450	1	-	CT880K450-R610-130-1

Corner Track

Chain type 880M,881M series

Material :UHMWPE
Color :Black
Standard α= 90°
Other α=15°，30°，45°，60°.

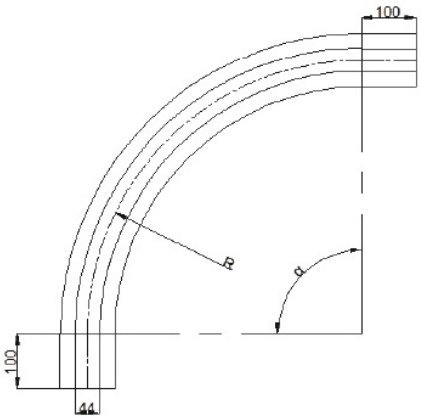

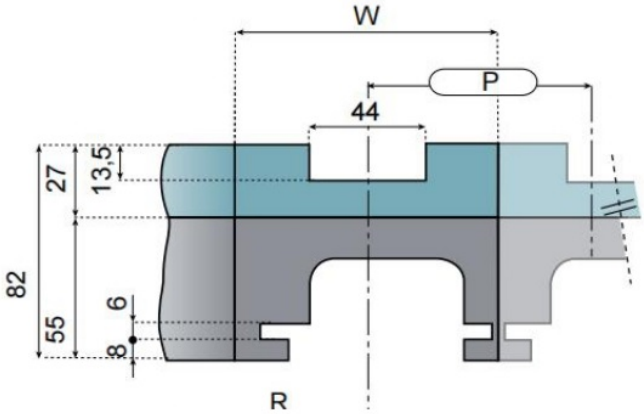

ref.No	P	no of row	W	R500	R610
				Code	
880M-K325 880M-K450 881M-K325	85	1	100	CT880M325-R500-100-1	CT880M325-R610-100-1
		2	185	CT880M325-R500-185-2	CT880M325-R610-185-2
		3	270	CT880M325-R500-270-3	CT880M325-R610-270-3
		4	355	CT880M325-R500-355-4	CT880M325-R610-355-4
880M-K450 881M-K450	120	1	130	-	CT881M450-R610-130-1
		2	250	-	CT881M450-R610-250-2
		3	370	-	CT881M450-R610-370-3
		4	490	-	CT881M450-R610-490-4
881M-K750	196	1	214	-	CT881M750-R610-214-1
		2	410	-	CT881M750-R610-410-2

*if α=45°，pls mention CT880M325-R500-100-1-45°

Corner Track

Chain type 880TAB-BO series

Material :UHMWPE
Color :Black
Standard α= 90°
Other α=15°，30°，45°，60°.

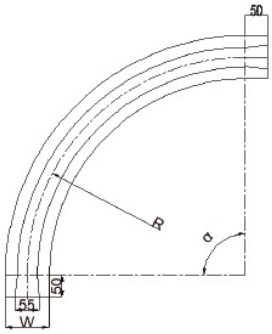

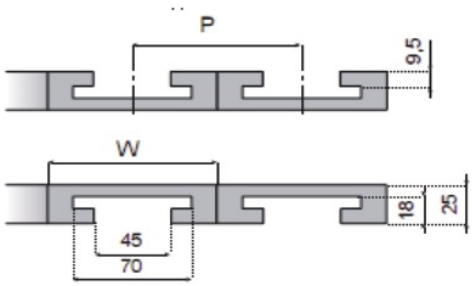

ref.No	P	no of row	W	R200 Code
880TAB-BO-K325	85	1	100	CT880TBOK325-R200-100-1
		2	185	CT880TBOK325-R200-185-2
		3	270	CT880TBOK325-R200-270-3
880TAB-BO-K450	120	1	130	CT880TBOK450-R200-130-1
		2	250	CT880TBOK450-R200-250-2
		3	370	CT880TBOK450-R200-370-3

*if α=45°，pls mention CT880TK325-R500-100-1-45°

Corner Track

Chain type 1060,783M series

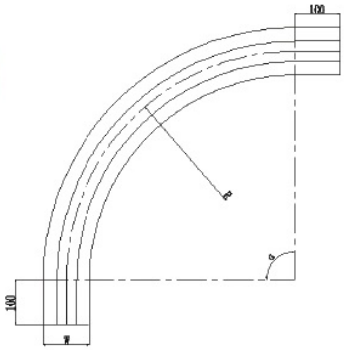

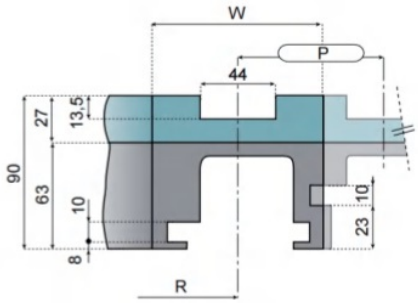

ref.No	P	no of row	W	R500 Code
1060FT-K330 1060FG-K330 783M-K330	85	1	100	CT1060-R500-100-1
		2	185	CT1060-R500-185-2
		3	270	CT1060-R500-270-3
		4	355	CT1060-R500-355-4

*if α=45°，pls mention CT1060-R500-100-1-45°

Chain type 1873TAB，1873TAB-GD，1873TAB-G3SJ

Material :UHMWPE
Color :Black
Standard α= 90°
Other α=15° ，30°，45°，60°.

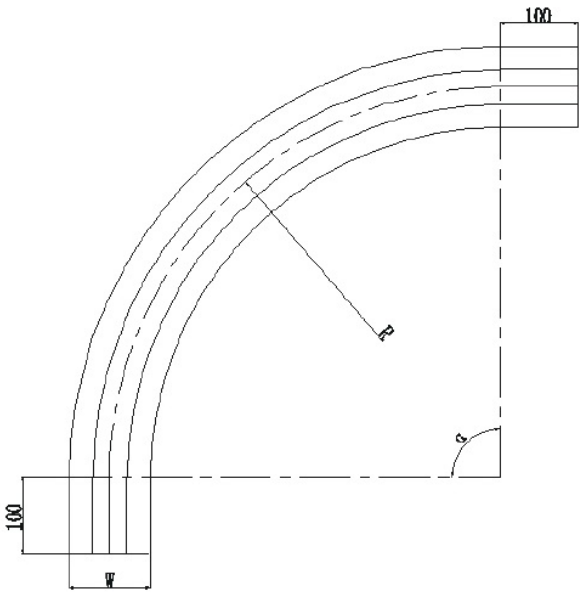

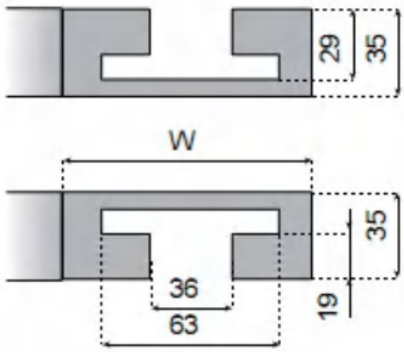

ref.No	P	no of row	W	R500 Code
1873TAB-K325 1873TAB-G3SJ-K325 1873TAB-GD-K325	85	1	100	CT1873-K325-R500-100-1
		2	185	CT1873-K325-R500-185-1
1873TAB-K450 1873TAB-G3SJ-K450	120	1	130	CT1873-K450-R500-130-1
		2	250	CT1873-K450-R500-250-2
1873TAB-K600 1873TAB-GD-K600	160	1	160	CT1873-K600-R500-160-1
		2	320	CT1873-K600-R500-320-2
1873TAB-K750 1873TAB-GD-K750	200	1	200	CT1873-K750-R500-200-1
		2	400	CT1873-K750-R500-400-2
1873TAB-K1000	260	1	260	CT1873-K1000-R500-260-1
		2	520	CT1873-K1000-R500-520-2
1873TAB-K1200	310	1	310	CT1873-K1200-R500-310-1
		2	620	CT1873-K1200-R500-620-2

X1270 Series

X1270 Flat Top

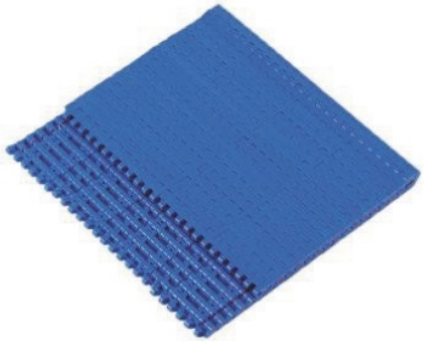

- Pitch:12.7 mm
- Minimum Width:76.2mm
- Open Area:0%
- Thickness:8.7 mm
- Rod:4.6mm
- Color Option:Blue

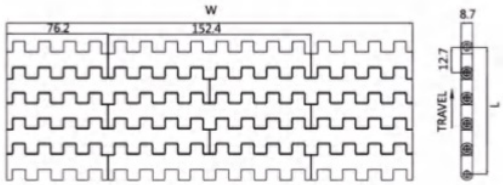

Belt Data

Belt material	PP	Acetal	
Rod material	PP	PBT	PP
Tensile strength (N/M)	6000	10500	6300
Temperature range °C	5-105	-30-90	5-93
Belt weight KG/m²(Flat top)	5.9	8.6	8.6
Belt weight KG/m²(Flush Grid)	5.5	8	8

P95

Standard Width

mm	76.2	152.4	228.6	304.8	457.2	533.4	609.6	762	76.2*N
inch	*3*	*6*	*9*	*12*	*18*	*21*	*24*	*30*	*3*N*

Nonstandard widths are offered in increments of 12.7mm (0.5")
Real belt width are in most cases 0.1% to 0.3% wider or less

X1270 Fush Grid

- Pitch:12.7 mm
- Minimum Width:152.4mm
- Open Area:17%
- Thickness:8.9 mm
- Rod:4.6mm
- Color Option:Blue

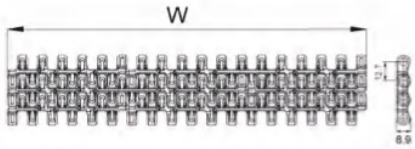

Standard Width

mm	76.2	152.4	228.6	304.8	457.2	533.4	609.6	762	etc
inch	*3*	*6*	*9*	*12*	*18*	*21*	*24*	*30*	*etc*

Nonstandard widths are offered in increments of 12.7mm (0.5")
Real belt width are in most cases 0.1% to 0.3% wider or less

X2120 Series

X2120 Flat Top

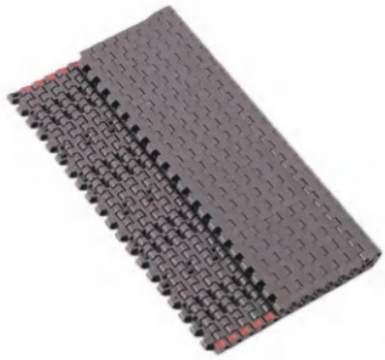

- Pitch:12.7 mm
- Minimum Width:85mm
- Open Area:0%
- Thickness:8.7 mm
- Rod:4.5 mm
- Color Option: Blue , Brown

Belt Data

Belt Material	Acetal	
Rod Material	PBT	PP
Tensile strength (N/M)	17280	10360
Temperature range °C	-30-90	5-105
Belt weight KG/m²(Flat top)	8.6	8.6
Belt weight KG/m²(Top Rubber)	9.6	9.6

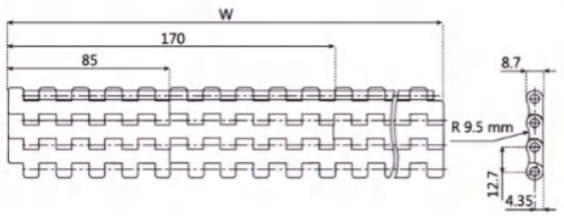

P95

Standard Width

mm	85	170	255	340	425	510	595	680	85*N
inch	*3.35*	*6.69*	*10.04*	*13.39*	*16.73*	*20.08*	*23.43*	*26.77*	*3.35*N*

Real belt width are in most cases 0.1% to 0.3% wider or less

X2120 Flat TOP with Top Rubber

- Pitch:12.7 mm
- Minimum Width:85mm
- Open Area:0%
- Thickness:10.7 mm
- Rod:4.5 mm
- Color Option: Dark Green
- Color of Rubber :Black

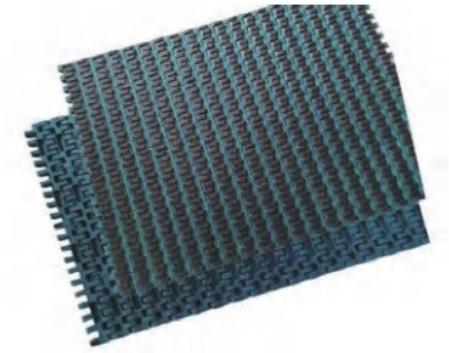

P95

Standard Width

mm	85	170	255	340	425	510	595	680	85*N
inch	*3.35*	*6.69*	*10.04*	*13.39*	*16.73*	*20.08*	*23.43*	*26.77*	*3.35*N*

Real belt width are in most cases 0.1% to 0.3% wider or less

X1100 Series

X1100 Flat Top

•Pitch:15.2 mm
•Minimum Width:152.4mm
•Open Area:0%
•Thickness:8.7 mm
•Rod:4.6mm
•Color Option:Blue

Belt Data

Belt material	Acetal	
Rod material	PBT	PP
Tensile strength (N/M)	14500	10500
Temperature range °C	-30-90	5-93
Belt weight KG/m²(Flat Top)	6.3	6.3
Belt weight KG/m²(Flush Grid)	5.7	5.7

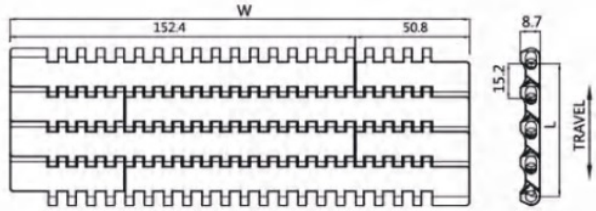

P96

Standard Width

mm	152.4	304.8	457.2	609.6	762	914.4	1066.8	152.4*N
inch	*6*	*12*	*18*	*24*	*30*	*36*	*42*	*6*N*

Nonstandard widths are offered in increments of 25.4mm(1")
Real belt width are in most cases 0.1% less

X1100 Flush Grid

•Pitch:15.2 mm
•Minimum Width:152.4mm
•Open Area:28%
•Thickness:8.7mm
•Rod:4.6 mm
•Color Option:Blue

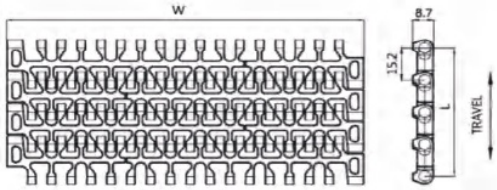

Standard Width

mm	152.4	304.8	457.2	609.6	762	914.4	1066.8	152.4*N
inch	*6*	*12*	*18*	*24*	*30*	*36*	*42*	*6*N*

Nonstandard widths are offered in increments of 25.4mm(1")
Real belt width are in most cases 0.1% less

X1500 Series

X1500 Insert Roller

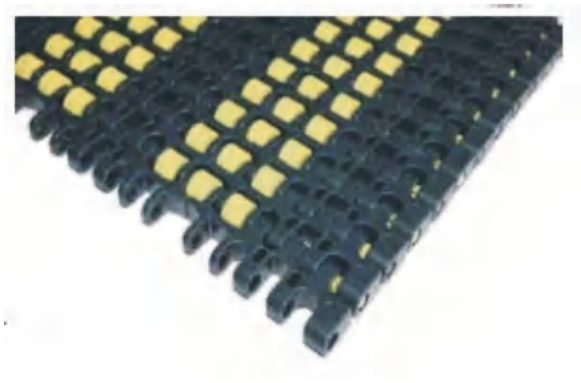

- •Pitch:15.2 mm
- •Minimum Width:206mm
- •Open Area:12.5%
- •Thickness:11.2 mm
- •Rod:5mm
- •Color Option:Dark Green

Belt Data

Belt material	Acetal	
Rod material	PBT	PP
Tensile strength (N/M)	14500	11900
Temperature range °C	-30-90	5-93
Belt weight KG/m²	7.7	7.7

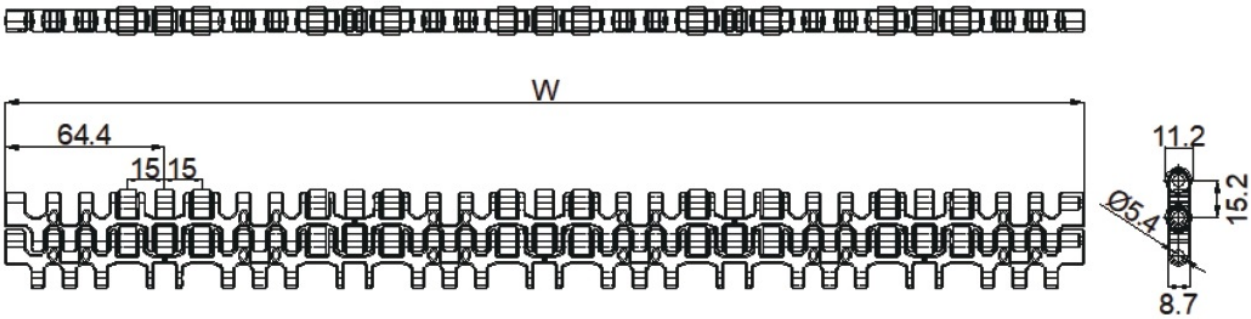

P96

P133

Standard Width

mm	206	283	360	437	514	591	668	206+77*N
inch	*8.11*	*11.14*	*14.17*	*17.2*	*20.24*	*23.27*	*26.3*	*8.11+3*N*

Real belt width are in most cases 0.1% to 0.3% wider or less

X5935 Series

X5935 Flat Top

- Pitch:19.05 mm
- Minimum Width:76.2mm
- Open Area:0%
- Thickness:8.7 mm
- Rod:6 mm
- Color Option: Brown,White,Blue

Belt Data

Belt material	PP	POM	
Rod material	PP	PBT	PP
Tensile strength (N/M)	8800	14500	10500
Temperature range °C	5-105	-30-90	5-93
Belt weight KG/m²(Flat top)	4.3	6.7	6.7

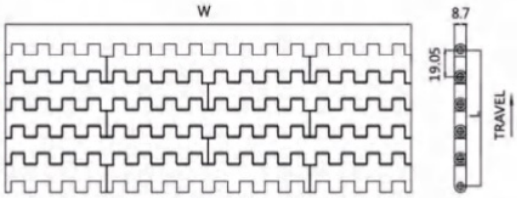

P97

Standard Width

mm	76.2	152.4	228.6	304.8	457.2	533.4	609.6	762
inch	*3*	*6*	*9*	*12*	*18*	*21*	*24*	*30*

Nonstandard widths are offered in increments of 19mm (0.75")
Real belt width are in most cases 0.1% to 0.3% wider or less

X5935 Flat Top (Flush Grid) with cleats

Standard height of cleats: 25mm,50mm,100mm

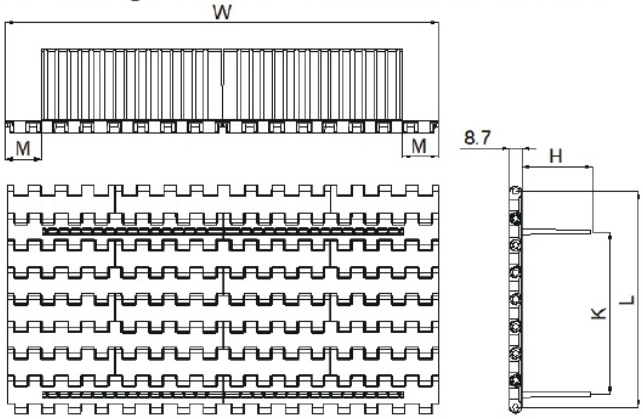

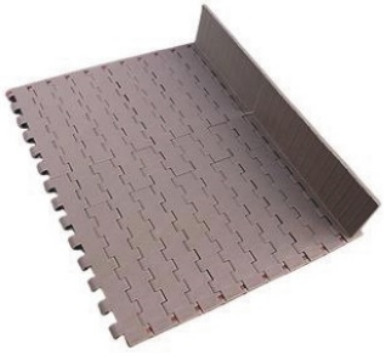

Confirm the size as below :

L	The total length of the belt
M	Cleat side -indent (single side)
H	The height of cleat
K	Distance between two cleats
W	The width of the belt

X8505 Series

X8505 Flat Top

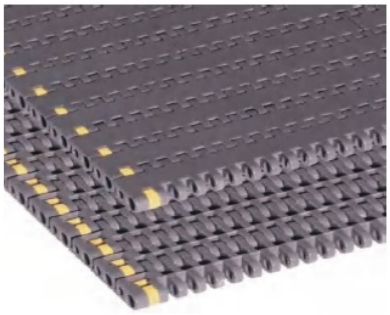

- Pitch:19.05 mm
- Minimum Width:304.8mm
- Open Area:0%
- Thickness:9.2 mm
- Rod:4.6mm
- Color Option: Brown

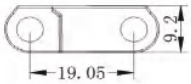

Belt Data

Belt Material	Acetal	
Rod Material	PBT	PP
Tensile strength (N/M)	13500	11500
Temperature range °C	-30-90	5-93
Belt weight KG/m²(Flat Top)	9	9
Belt weight KG/m²(Flush Grid)	8.8	8.8

P97

Standard Width

mm	304.8	457.2	533.4	609.6	762	914.4	1066.8	304.8*N
inch	*12*	*18*	*21*	*24*	*30*	*36*	*42*	*12*N*

Nonstandard widths are offered in increments of 8.4mm (0.33")
Real belt width are in most cases 0.1% to 0.3% wider or less

X8505 Fush Grid

- Pitch:19.05 mm
- Minimum Width:304.8mm
- Open Area:14%
- Thickness:9.2 mm
- Rod:4.6 mm
- Color Option: Brown

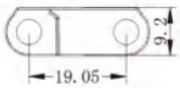

P97

Standard Width

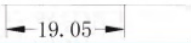

mm	304.8	457.2	533.4	609.6	762	914.4	1066.8	1219.2
inch	*12*	*18*	*21*	*24*	*30*	*36*	*42*	*48*

Nonstandard widths are offered in increments of 8.4mm (0.33")
Real belt width are in most cases 0.1% to 0.3% wider or less

X1000 Series

X1000 Flat Top

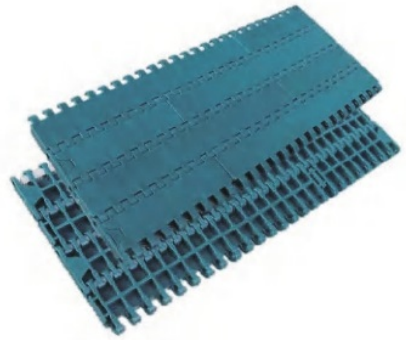

- Pitch:25.4 mm
- Minimum Width:85 mm
- Open Area:0%
- Thickness:8.7 mm
- Rod:4.6 mm
- Color Option: Dark Green ,Light Green

Belt Data

Belt Material	PP	Acetal	
Rod Material	PP	PP	PBT
Tensile strength (N/M)	10000	17280	22000
Temperature range °C	5-105	-30-90	5-93
Belt weight KG/m²(Flat Top)	4.2	6.4	6.4
Belt weight KG/m²(Flush Grid)	3.8	5.8	5.8

Without Positrack -A

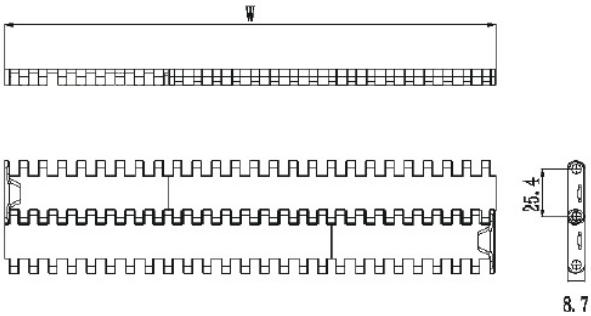

With Positrack -B

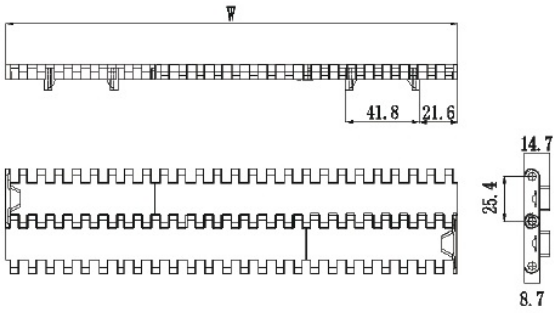

P98

Standard Width

mm	85	170	255	340	425	510	595	680	85*N
inch	*3.35*	*6.69*	*10.04*	*13.39*	*16.73*	*20.08*	*23.43*	*26.77*	*3.35*N*

Nonstandard widths are offered in increments of 10mm (0.39")
Real belt width are in most cases 0.1% to 0.3% wider or less

Product code for example :X1000FT W170 Acetal-PBT A
means X1000 Flat top belt ,width 170 mm , belt material Acetal ,pin material PBT without positrack
Product code for example :X1000FT W170 Acetal-PBT B
means X1000 Flat top belt ,width 170 mm , belt material Acetal ,pin material PBT with positrack

X1000 Flush Grid

- Pitch:25.4 mm
- Minimum Width:85 mm
- Open Area:38%
- Thickness:8.7 mm
- Rod:4.6 mm
- Color Option: Dark Green ,Light Green

Without Positrack -A

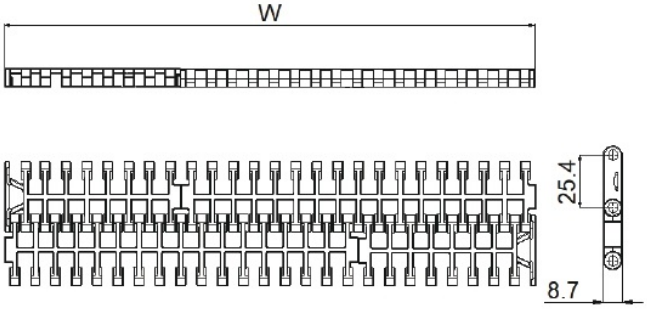

With Positrack -B

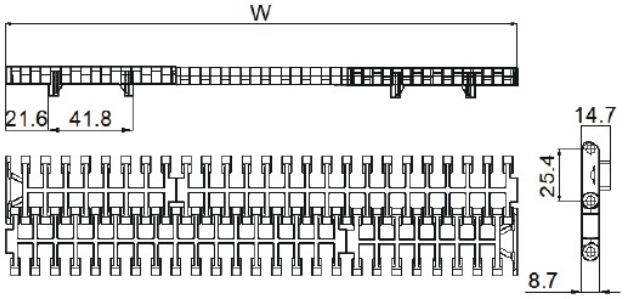

Standard Width

mm	85	170	255	340	425	510	595	680	85*N
inch	*3.35*	*6.69*	*10.04*	*13.39*	*16.73*	*20.08*	*23.43*	*26.77*	*3.35*N*

P98

Nonstandard widths are offered in increments of 10mm (0.39")
Real belt width are in most cases 0.1% to 0.3% wider or less

Product code for example :X1000FG W170 Acetal-PBT A
means X1000 Flush Grid belt ,width 170 mm , belt material Acetal ,pin material PBT without positrack
Product code for example :X1000FG W170 Acetal-PBT B
means X1000 Flush Grid belt ,width 170 mm , belt material Acetal ,pin material PBT with positrack

X1000 Flat Top with positrack Mold to Width

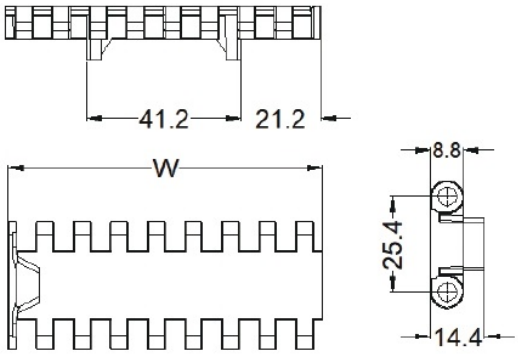

Code	Width(mm)
X1000-83.8	83.8
X1000-85	85

P98

X1600 Series

- Main application is for glass products,PET bottles.
- Pitch:25.4mm
- Mininum Width:85mm
- Mold to Width : 83.8mm
- Cleat height : 50 , 75mm
- Thickness:8.7mm
- rod:4.6mm
- Color Option :Grey

Belt Data

Belt material	Acetal	
Rod material	PBT	PP
Tensile strength (N/M)	16000	10360
Temperature range °C	-30-90	5-105
Belt weight KG/m²(Flat top)	7.3	7.1

Without Positrack -A

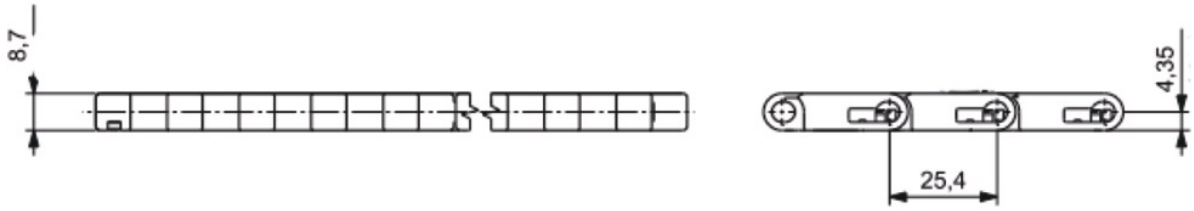

With Positrack -B

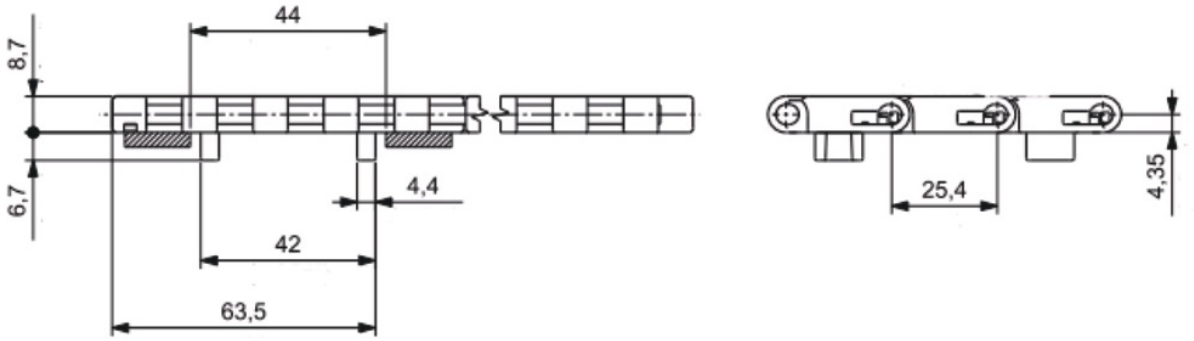

Standard Width

mm	85	170	255	340	425	510	595	680	85*N
inch	*3.35*	*6.69*	*10.04*	*13.39*	*16.73*	*20.08*	*23.43*	*26.77*	*3.35*N*

Real belt width are in most cases 0.1% to 0.3% wider or less

Product code for example :X1600 W170 Acetal-PBT A
means X1600 Flat top belt ,width 170 mm , belt material Acetal ,pin material PBT without positrack
Product code for example :X1600 W170 Acetal-PBT B
means X1600 Flat top belt ,width 170 mm , belt material Acetal ,pin material PBT with positrack

X1600 Flat Top with positrack Mold to Width

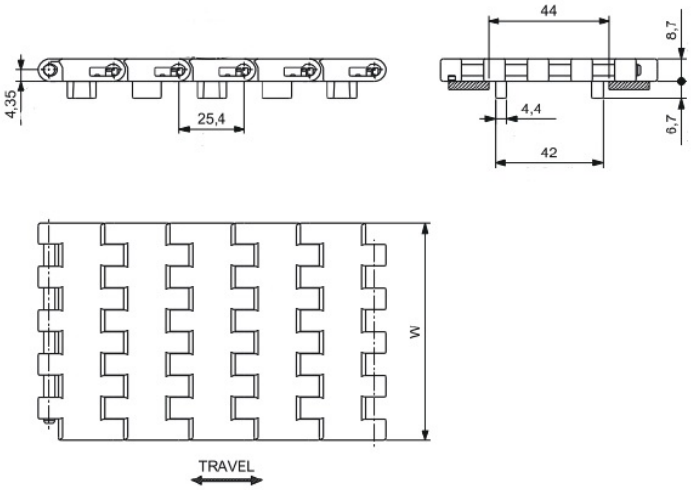

CODE	Width(mm)
X1000-83.8	83.8

Sprocket

Sprockets for X1600 series

Machined sprockets

Material: PA

Wear resistance and high performance

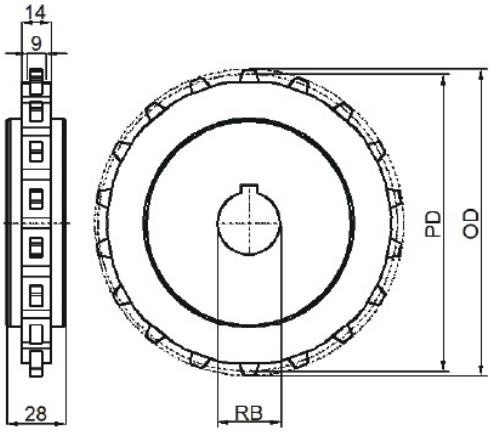

Sprocket Code	Number of Teeth	RB	PD	OD	Hub Dia
		mm	mm	mm	mm
Machined Drive Sprockets - X1600					
X1600T14RB25-01	14	25	114.1	114.4	28
X1600T14RB30-01		30			
X1600T14RB40-01		40			
X1600T16RB25-01	16	25	130.1	130.2	
X1600T16RB30-01		30			
X1600T16RB40-01		40			
X1600T18RB25-01	18	25	146.3	146.5	
X1600T18RB30-01		30			
X1600T18RB40-01		40			
X1600T20RB25-01	20	25	153.6	154.6	
X1600T20RB30-01		30			
X1600T20RB40-01		40			

Square bore is available for T16,18,20

X700 Series

X700 Flat Top

Pitch:25.4 mm
Minimum Width:152.4mm
Open Area:0%
Thickness:10 mm
Rod:4.6 mm
Color Option: Blue or White

Belt Data

Belt Material	PP	Acetal	
Rod Material	PP	PBT	PP
Tensile strength (N/M)	8800	15800	8800
Temperature range °C	5-105	-30-90	5-93
Belt weight KG/m²(Flat Top)	5.2	7.4	7.4

P99

Standard Width

mm	152.4	304.8	457.2	609.6	762	914.4	1066.8	152.4*N
inch	*6*	*12*	*18*	*24*	*30*	*36*	*42*	*6*N*

Nonstandard widths are offered in increments of 16.9mm (0.66")
Real belt width are in most cases 0.1% to 0.3% wider or less

X700 Flat Top with cleats

Standard height of cleats: 30mm , 50mm

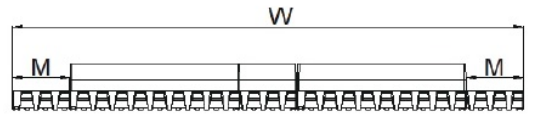

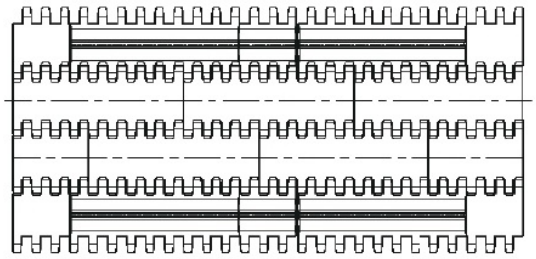

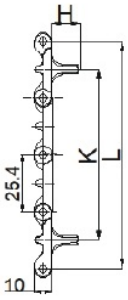

Confirm the size as below :

L	The total length of the belt
M	Cleat side -indent (single side)
H	The height of cleat
K	Distance between two cleats
W	The width of the belt

X2500 Series

X2500 Flat Top

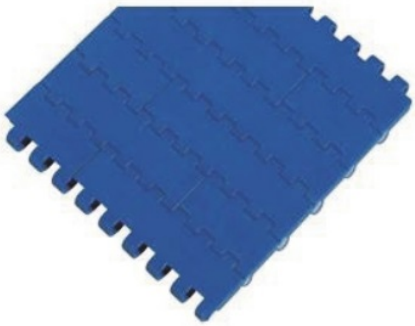

- Pitch:25.4 mm
- Minimum Width:150 mm
- Open Area:0%
- Thickness:11 mm
- Rod:4.7 mm
- Color Option: Blue or White

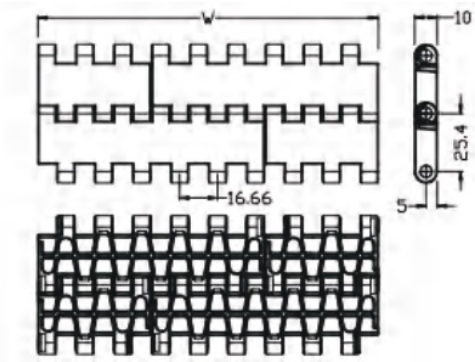

Belt Data

Belt Material	PP	Acetal	
Rod Material	PP	PBT	PP
Tensile strength (N/M)	8900	18000	9000
Temperature range °C	5-105	-30-90	5-93
Belt weight KG/m² (Flat Top)	5.4	8.5	8.5
Belt weight KG/m² (Flush Grid)	4.6	7.1	7.1

P99

Standard Width

mm	150	200	250	300	350	400	450	50*N
inch	*6*	*8*	*10*	*12*	*14*	*16*	*18*	*2*N*

Nonstandard widths are offered in increments of 16.66mm (0.66")
Real belt width are in most cases 0.1% to 0.3% wider or less

X2500 Flush Grid

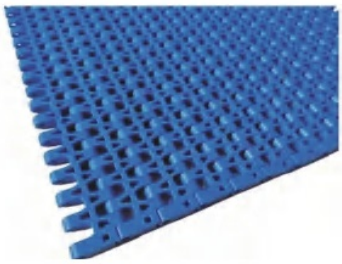

- Pitch:25.4 mm
- Minimum Width:50 mm
- Open Area:35%
- Thickness:11 mm
- Rod:4.7 mm
- Color Option: Blue or White

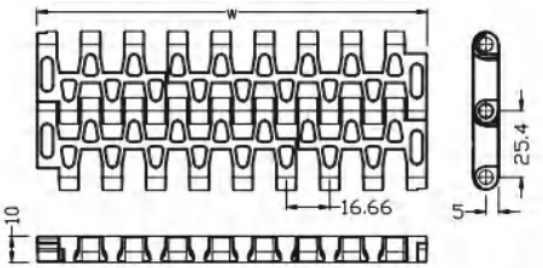

P99

Standard Width

mm	150	200	250	300	350	400	450	50*N
inch	*6*	*8*	*10*	*12*	*14*	*16*	*18*	*2*N*

Nonstandard widths are offered in increments of 16.66mm (0.66")
Real belt width are in most cases 0.1% to 0.3% wider or less

X2500 Flat Top (Flush Grid) with cleats

Standard height of cleats :25mm ,50mm ,75mm,100mm

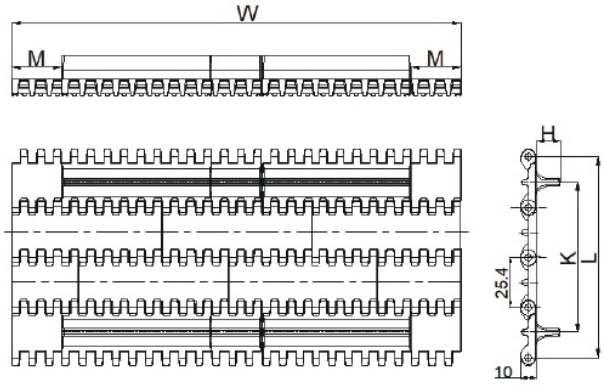

Confirm the size as below :

L	The total length of the belt
M	Cleat side -indent (single side)
H	The height of cleat
K	Distance between two cleats
W	The width of the belt

Standard width refer X2500 Flat Top

X2500 Flat Top (Flush Grid) with cleats +side walls

Standard height of cleats : 25mm,50mm,75mm,100mm

Standard height of sidewalls: 25mm,50mm

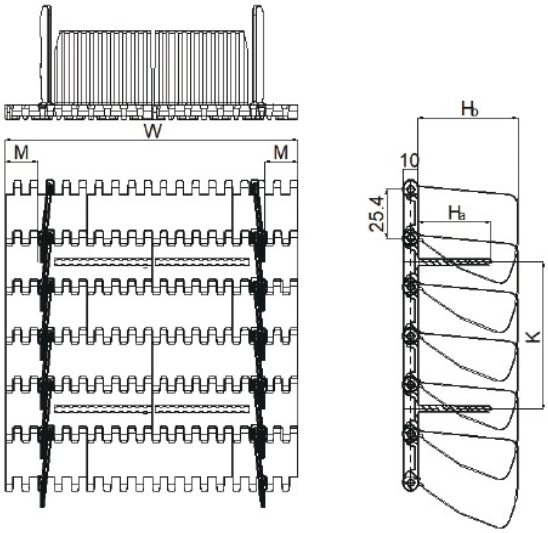

Confirm the size as below :

L	The total length of the belt
M	Cleat side -indent (single side)
H	The height of cleat
K	Distance between two cleats
W	The width of the belt

Standard width refer X2500 Flat Top

X7100 Series

X7100 Side Flexing

- Pitch:25.4 mm
- Minimum Width:76.2mm
- Open Area:55%
- Thickness:13 mm
- Rod:4.7 mm
- Color Option: White,Blue
- Inner Radius :2.5

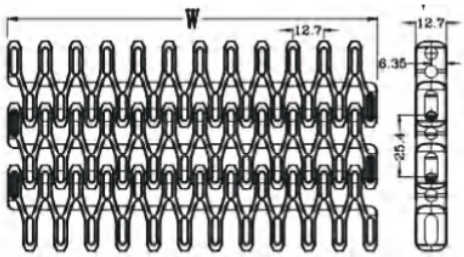

P100

Belt Data

Belt Material	PP	Acetal	
Rod Material	PP	PP	PBT
Tensile strength (N/M)	8900	15000	18000
Temperature range °C	5-105	5-93	-30-90
Belt weight KG/m²	4.2	6.4	6.4

Standard Width

mm	76.2	152.4	228.6	304.8	457.2	533.4	609.6	76.2*N
inch	*3*	*6*	*9*	*12*	*18*	*21*	*24*	*3*N*

Nonstandard widths are offered in increments of 12.7mm (0.5")
Real belt width are in most cases 0.1% to 0.3% wider or less

Recommedation of wear strip

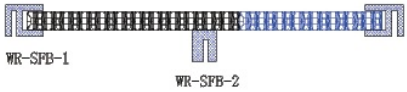

X7100 TAB Side Flexing

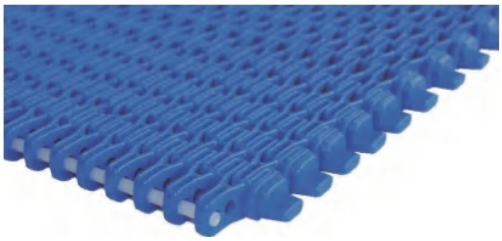

- Pitch:25.4 mm
- Minimum Width:95.2mm
- Open Area:55%
- Thickness:13 mm
- Rod:4.7 mm
- Color Option: White,Blue
- Inner Radius :2.5

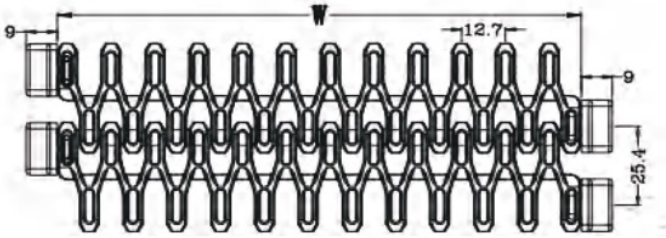

Standard Width

mm	95.2	171.4	247.6	323.8	400	476.2	552.4	19+76.2*N
inch	*3.75*	*6.75*	*9.75*	*12.75*	*15.75*	*18.75*	*21.75*	*0.75+3*N*

Nonstandard widths are offered in increments of 12.7mm (0.5")
Real belt width are in most cases 0.1% to 0.3% wider or less

X7300 Series

X7300 Flush Grid

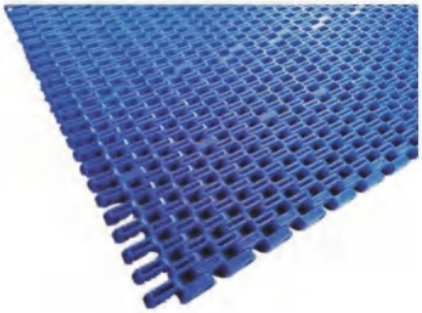

- Pitch:25.4 mm
- Minimum Width:76.2mm
- Open Area:34%
- Thickness:8.8 mm
- Rod:4.7 mm
- Color Option: Blue

Belt Data

Belt Material	PP	Acetal	
Rod Material	PP	PP	PBT
Tensile strength (N/M)	8900	15000	18000
Temperature range °C	5-105	-30-90	5-93
Belt weight KG/m²	4.2	6.4	6.4

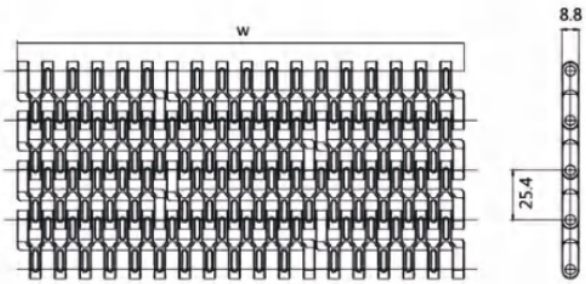

P100

Standard Width

mm	76.2	152.4	304.8	457.2	533.4	609.6	609.6	76.2*N
inch	*3*	*6*	*12*	*18*	*21*	*24*	*24*	*3*N*

Nonstandard widths are offered in increments of 12.7mm (0.5")
Real belt width are in most cases 0.1% to 0.3% wider or less

X7300 Flush Grid with cleats

Standard height of cleats 25mm

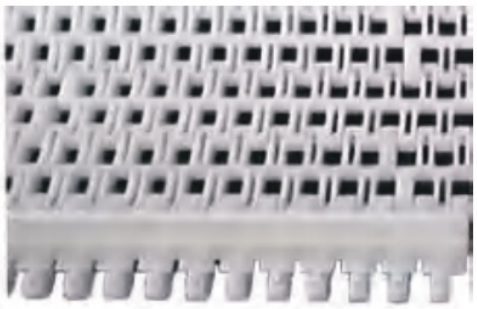

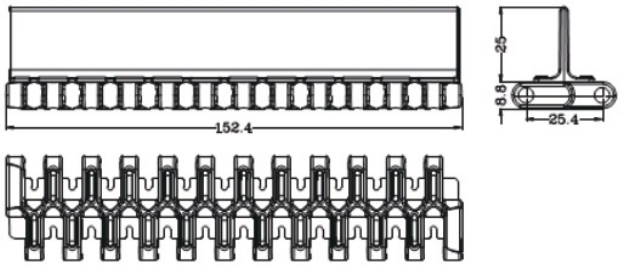

X2253 Series

X2253 Roller Top

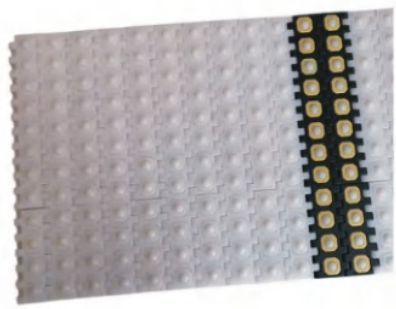

- Pitch:25.4 mm
- Minimum Width:76.2mm
- Thickness:8.7 mm
- Roller diameter:12.7 mm
- Color Option: White,Blue
- Roller Color : White

Belt Data

Belt material	Acetal	
Rod material	PBT	PP
Tensile strength (N/M)	20200	16000
Temperature range °C	-30-90	5-93
Belt weight KG/m²	9.2	9.2

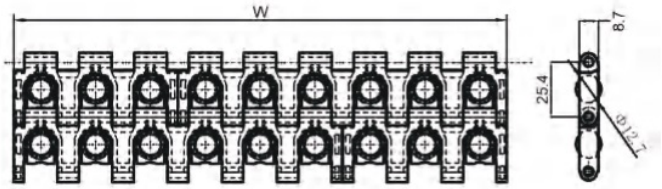

P101

Standard Width

mm	76.2	152.4	228.6	304.8	457.2	533.4	609.6	609.6	76.2*N
inch	*3*	*6*	*9*	*12*	*18*	*21*	*24*	*24*	*3*N*

Real belt width are in most cases 0.1% to 0.3% wider or less

X7705 Series

X7705 Flat TOP

- Pitch:25.4 mm
- Minimum Width:76.2mm
- Open Area:0%
- Thickness:12.2 mm
- Rod:6 mm
- Color Option: Brown

Belt Data

Belt material	PP	Acetal	
Rod material	PP	PBT	PP
Tensile strength (N/M)	11000	21500	17280
Temperature range °C	5-105	-30-90	5-93
Belt weight KG/m²(Flat Top)	8.2	12.5	12.5
Belt weight KG/m²(Flush Grid)	7.7	11.9	11.9

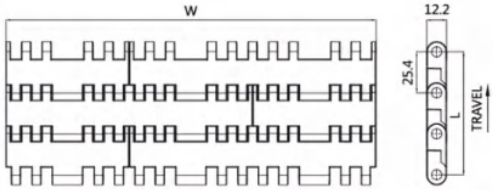

Standard Width

mm	76.2	152.4	228.6	304.8	457.2	609.6	914.4	1067	76.2*N
inch	*3*	*6*	*9*	*12*	*18*	*24*	*36*	*42*	*3*N*

Real belt width are in most cases 0.1% to 0.3% wider or less

P102

X2540 Series

X2540 Side Flexing

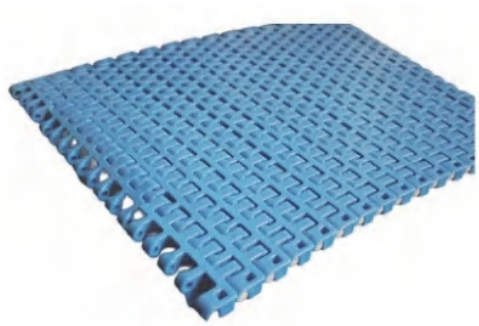

- •Pitch:25.4 mm
- •Minimum Width:152.4mm
- •Open Area35%
- •Thickness:11 mm
- •Rod:5 mm
- •Color Option: White,Blue
- •Positrack Option : Yes
- •Inner Radius: 2.5

Belt Data

Belt material	Acetal	
Rod material	PBT	PP
Tensile strength (N/M)	20200	15600
Temperature range °C	-30-90	5-93
Belt weight KG/m²	7.6	7.6

Standard

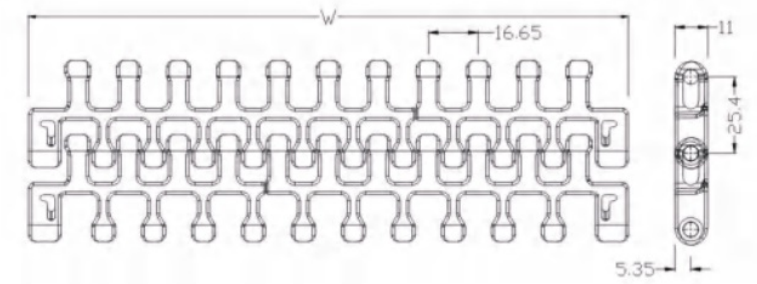

With inner positrack - A

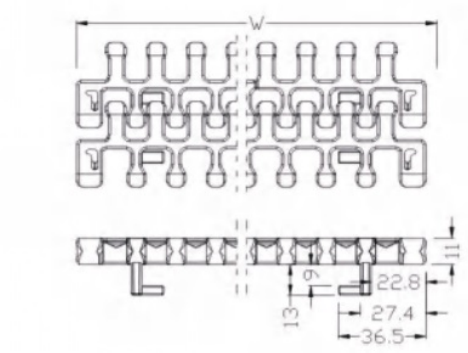

With outer positrack -B

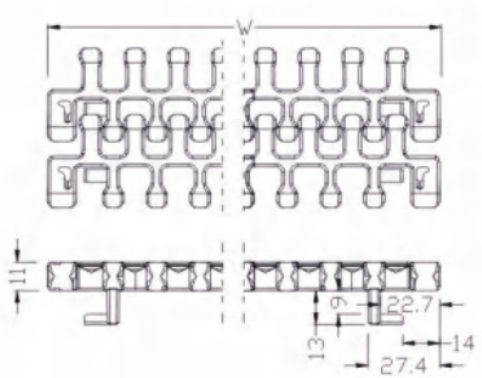

P101

Standard Width

mm	152.4	228.6	304.8	457.2	533.4	609.6	609.6	152.4*N
inch	*6*	*9*	*12*	*18*	*21*	*24*	*24*	*6*N*

Nonstandard widths are offered in increments of 16.65mm (0.655")

Product code for example :X2540 W228.6 POM-PBT A

X900 Series

X900 Flat TOP

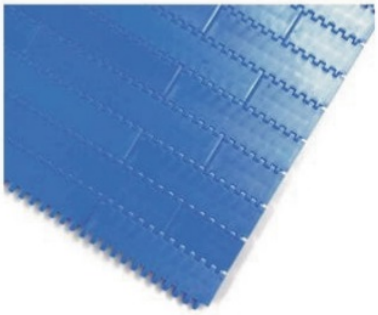

- Pitch:27.2 mm
- Minimum Width:152.4mm
- Open Area:0%
- Thickness:9 mm
- Rod:4.6 mm
- Color Option: White, Brown , Blue

Belt Data

Belt Material	PP	Acetal	
Rod Material	PP	PBT	PP
Tensile strength (N/M)	10360	24800	17280
Temperature range °C	5-105	-30-90	5-93
Belt weight KG/m²(Flat Top)	5.4	7.7	7.7
Belt weight KG/m²(Flush Gird)	4	5.8	5.8
Belt weight KG/m²(Perforated)	5.2	7.5	7.5
Belt weight KG/m²(Raised Rib)	NONE	8	8

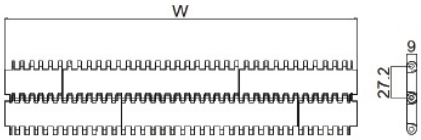

P102

Standard Width

mm	152.4	228.6	304.8	457.2	533.4	609.6	762	152.4*N
inch	*6*	*9*	*12*	*18*	*21*	*24*	*30*	*36*N*

Nonstandard widths are offered in increments of 8.4mm (0.33")
Real belt width are in most cases 0.1% to 0.3% wider or less

X900 Flush Grid

- Pitch:27.2 mm
- Minimum Width:152.4mm
- Open Area:38%
- Thickness:9 mm
- Rod:4.6 mm
- Color Option: White, Brown , Blue

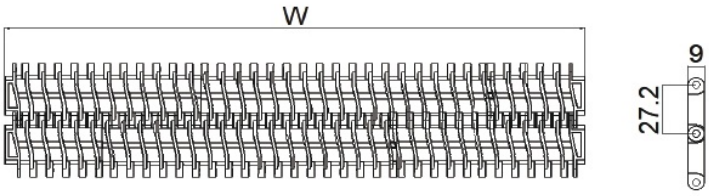

Standard Width

mm	152.4	228.6	304.8	457.2	533.4	609.6	762	152.4*N
inch	*6*	*9*	*12*	*18*	*21*	*24*	*30*	*36*N*

Nonstandard widths are offered in increments of 8.4mm (0.33")
Real belt width are in most cases 0.1% to 0.3% wider or less

X900 Perforated

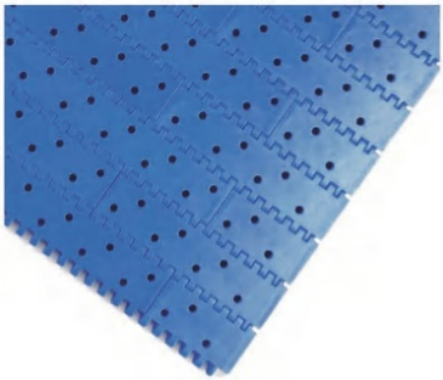

- Pitch:27.2 mm
- Minimum Width:152.4mm
- Open Area:7%
- Thickness:9 mm
- Rod:4.6 mm
- Color Option: Blue

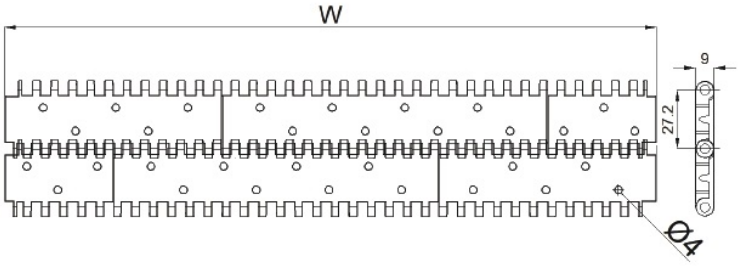

P102

Standard Width

mm	152.4	228.6	304.8	457.2	533.4	609.6	762	152.4*N
inch	*6*	*9*	*12*	*18*	*21*	*24*	*30*	*36*N*

Nonstandard widths are offered in increments of 8.4mm (0.33")
Real belt width are in most cases 0.1% to 0.3% wider or less

X900 Raised Rib

- Pitch:27.2 mm
- Minimum Width:152.4mm
- Open Area:38%
- Thickness:14 mm
- Rod:4.6 mm
- Color Option: Blue

Standard Width

mm	152.4	228.6	304.8	457.2	533.4	609.6	762	152.4*N
inch	*6*	*9*	*12*	*18*	*21*	*24*	*30*	*36*N*

Nonstandard widths are offered in increments of 8.4mm (0.33")
Real belt width are in most cases 0.1% to 0.3% wider or less

X900 Flat Top with Top Rubber

- Pitch:27.2 mm
- Minimum Width:152.4mm
- Thickness:11.5 mm
- Rod:4.6 mm
- Color Option: Blue
- Color of Rubber:Black

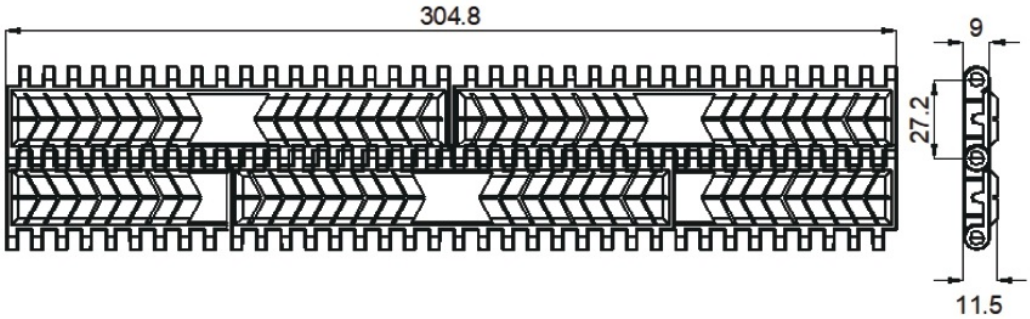

P102

Standard Width

mm	152.4	228.6	304.8	457.2	533.4	609.6	762	152.4*N
inch	*6*	*9*	*12*	*18*	*21*	*24*	*30*	*36*N*

Nonstandard widths are offered in increments of 8.4mm (0.33")
Real belt width are in most cases 0.1% to 0.3% wider or less

900 Raised Rib Mold to Width

W=28 ,37,46 mm

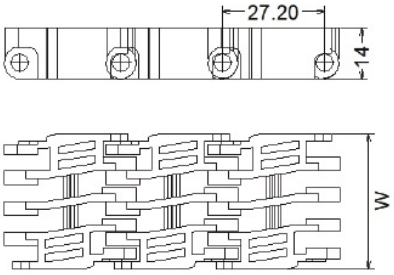

900 Transfer Combs

Code	900TC150

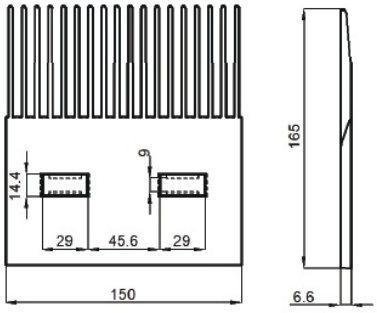

X900 Flat Top (Flush Grid) with Cleats

Standard height of cleats: 25mm,50mm.

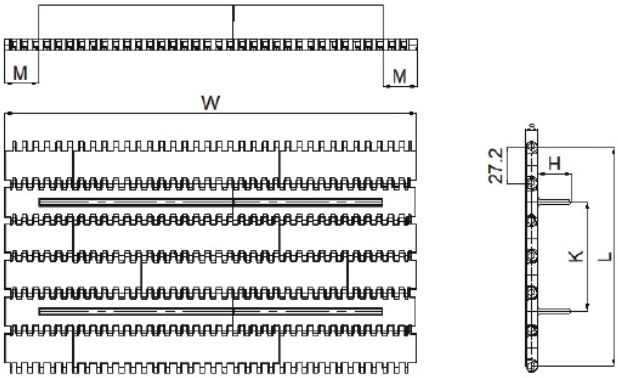

Confirm the size as below :

L	The total length of the belt
M	Cleat side -indent (single side)
H	The height of cleat
K	Distance between two cleats
W	The width of the belt

Standard width refer X900 Flat Top

X900 Flat Top(Flush Grid) with Cleats +sidewalls

Standard height of cleats: 25mm,50mm.

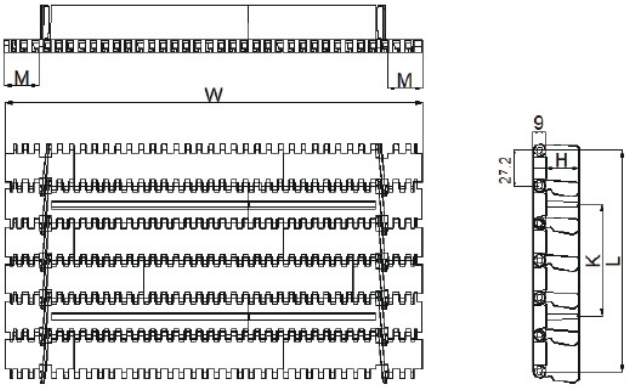

Confirm the size as below :

L	The total length of the belt
M	Cleat side -indent (single side)
H	The height of cleat
K	Distance between two cleats
W	The width of the belt

Standard width refer X900 Flat Top

X2556 Series

- Main application is plastic bottles , cartons, shrink wrapped cans
- Average inner Radius is : 2 times by width
- For Heavy Duty applications with high working load and speed
- With bearing and TAB

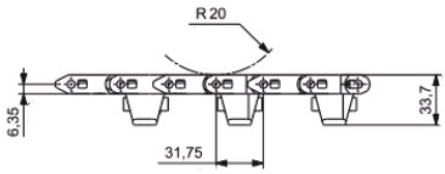

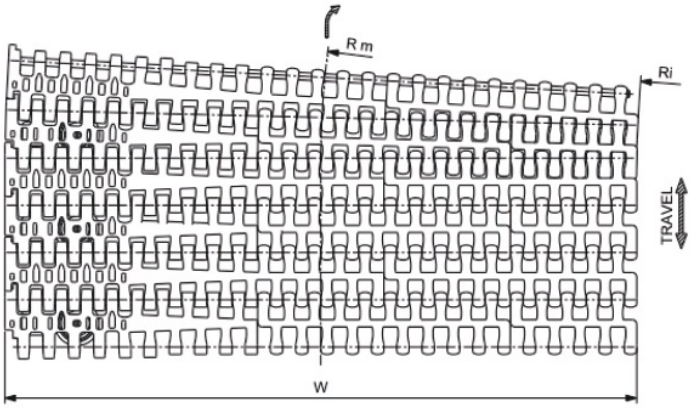

P103

Belt material	Pin material	Part Number	Width (mm)	Min.inner Radius (mm)
POM	PBT	X2556-255	255	510
		X2556-340	340	680
		X2556-425	425	850
		X2556-510	510	1020
		X2556-595	595	1190
		X2556-680	680	1360
		X2556-765	765	1530
		X2556-850	850	1700

For more technical support , pls contact sales

X2556A Series

- Main application is plastic bottles , cartons, shrink wrapped cans
- Average inner Radius is : 2 times by width
- For Heavy Duty applications with high working load and speed

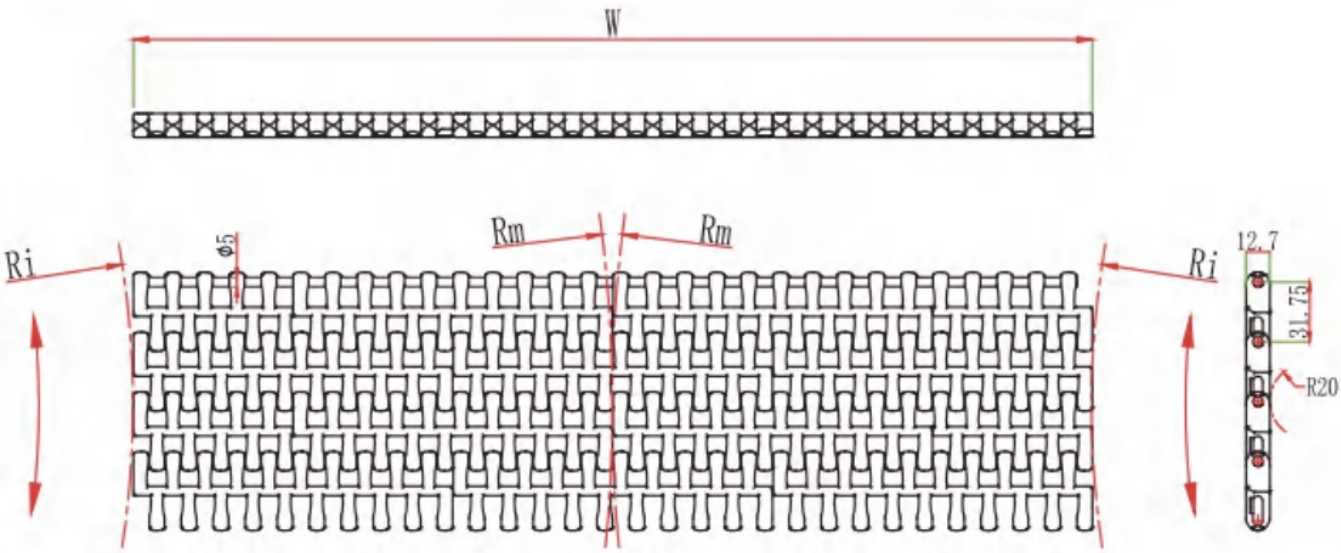

P103

Belt material	Pin material	Part Number	Width (mm)	Min.inner Radius (mm)
POM	PBT	X2556A-255	255	510
		X2556A-340	340	680
		X2556A-425	425	850
		X2556A-510	510	1020
		X2556A-595	595	1190
		X2556A-680	680	1360
		X2556A-765	765	1530
		X2556A-850	850	1700

For more technical support , pls contact sales

X2556-SR Series

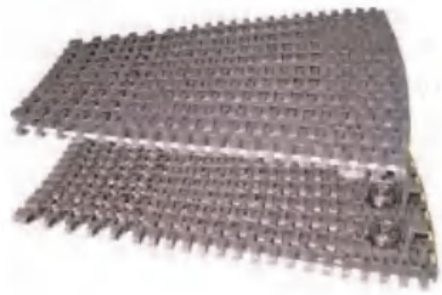

- Main application is plastic bottles , cartons, shrink wrapped cans
- Average inner Radius is : 1.5 times by width
- For Heavy Duty applications with high working load and speed
- With bearing and TAB

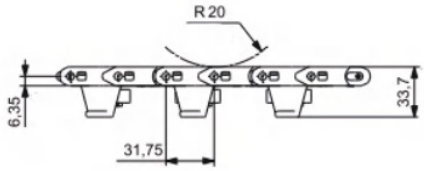

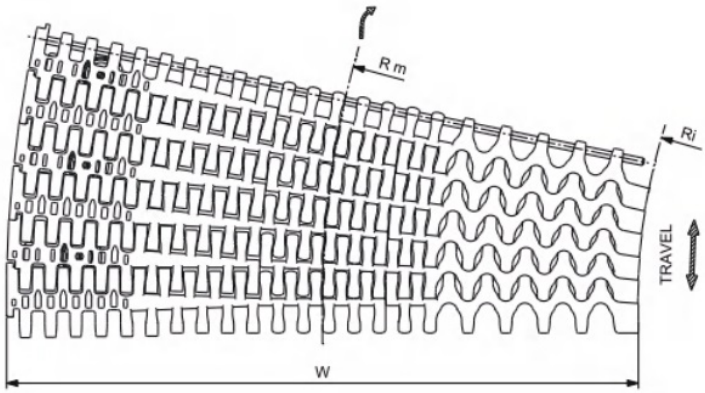

P103

Belt material	Pin material	Part Number	Width (mm)	Min.inner Radius (mm)
POM	PBT	X2556-SR--340	255	365
		X2556-SR--425	340	430
		X2556-SR--510	425	600
		X2556-SR--595	510	775
		X2556-SR--680	595	950
		X2556-SR--765	680	1120
		X2556-SR--850	765	1295

For more technical support , pls contact sales

X2556B-SR Series

- Main application is plastic bottles , cartons, shrink wrapped cans
- Average inner Radius is : 1.5 times by width
- For Heavy Duty applications with high working load and speed

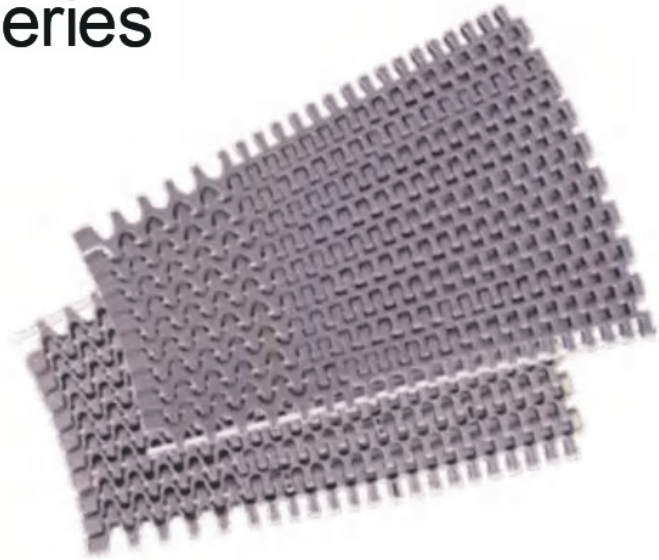

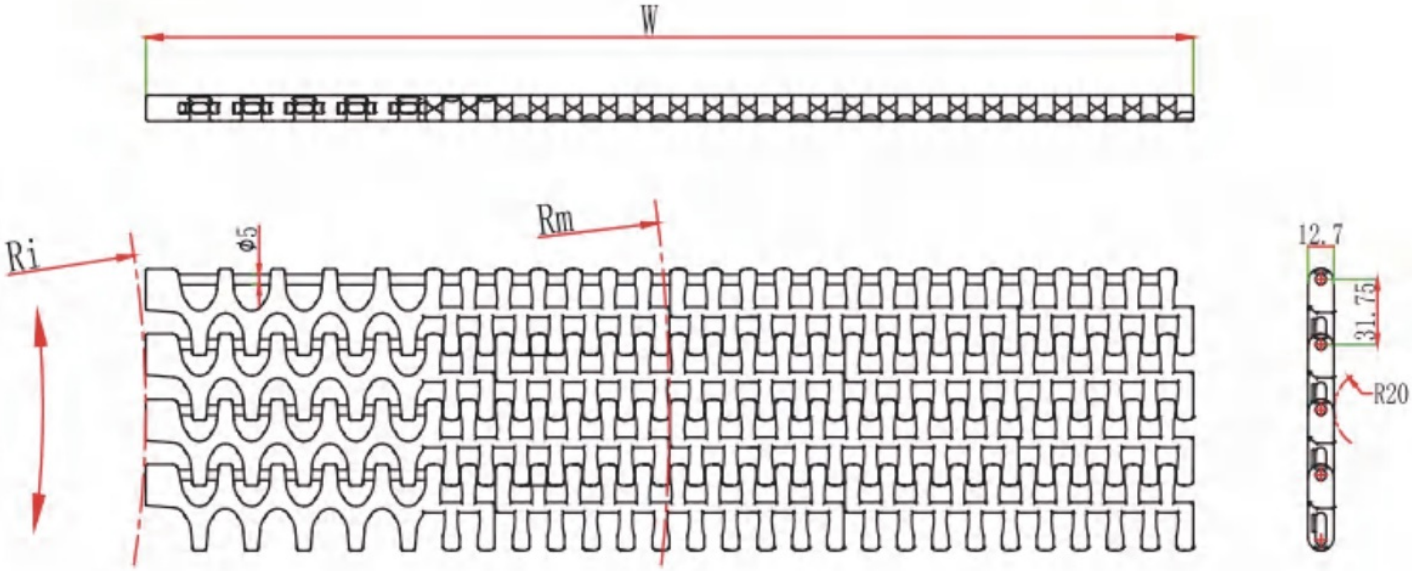

P103

Belt material	Pin material	Part Number	Width (mm)	Min.inner Radius (mm)
POM	PBT	X2556B-SR--340	255	365
		X2556B-SR--425	340	430
		X2556B-SR--510	425	600
		X2556B-SR--595	510	775
		X2556B-SR--680	595	950
		X2556B-SR--765	680	1120
		X2556B-SR--850	765	1295

For more technical support , pls contact sales

X5032 Series

X5032 Flush Grid

P105

- •Pitch:50.8 mm
- •Minimum Width:225mm
- •Open Area:34%
- •Thickness:16 mm
- •Rod:7mm
- •Color Option:Brown

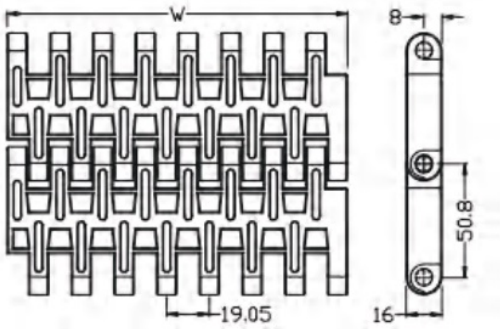

Belt Data

Belt material	PP	
Rod material	PBT	PP
Tensile strength (N/M)	28000	19000
Temperature range °C	5-93	5-105
Belt weight KG/m²	8	8

Standard Width

mm	225	300	375	450	525	600	675	225+75*N
inch	*9*	*12*	*15*	*18*	*21*	*24*	*27*	*9+3*N*

Nonstandard widths are offered in increments of 18.75mm (0.74")
Real belt width are in most cases 0.1% to 0.3% wider or less

X400 Roller Top

X400 Roller Top

P106

Pitch:50.8 mm
Roller dia:17.8mm,Roller length:20.9m
Roller degree:0° or 90°
Minimum Width:254mm
Open Area:18%
Thickness:16 mm
Rod:6mm
Color Option:Grey for belt , White for roller

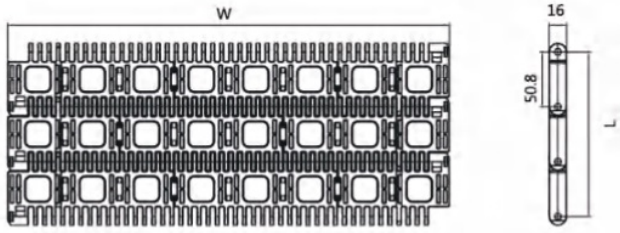

Belt Data

Belt material	PP	
Rod material	NYLON	PP
Tensile strength (N/M)	35000	26000
Temperature range °C	1-93	1-93
Belt weight KG/m²	13	13

Width reference:

mm	254	304.8	355.6	406.4	457.2	508	609.9	254*N+50.8*n
inch	*10*	*12*	*14*	*16*	*18*	*20*	*22*	*10*N+2*n*

Nonstandard widths are offered in increments of 50.8mm (2")
Real belt width are in most cases 0.1% to 0.3% wider or less

X4809 Series

X4809

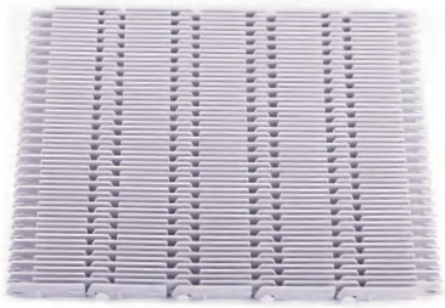

- Pitch:50.8 mm
- Minimum Width:152.4mm
- Open Area:34%
- Thickness:24 mm
- Rod:6mm(7mm for SS)
- Color Option:Brown

Belt Data

Belt material	PP	
Rod material	SS	PP
Tensile strength (N/M)	38000	23400
Temperature range °C	5-105	5-105
Belt weight （X4809) KG/m²	14	12.5

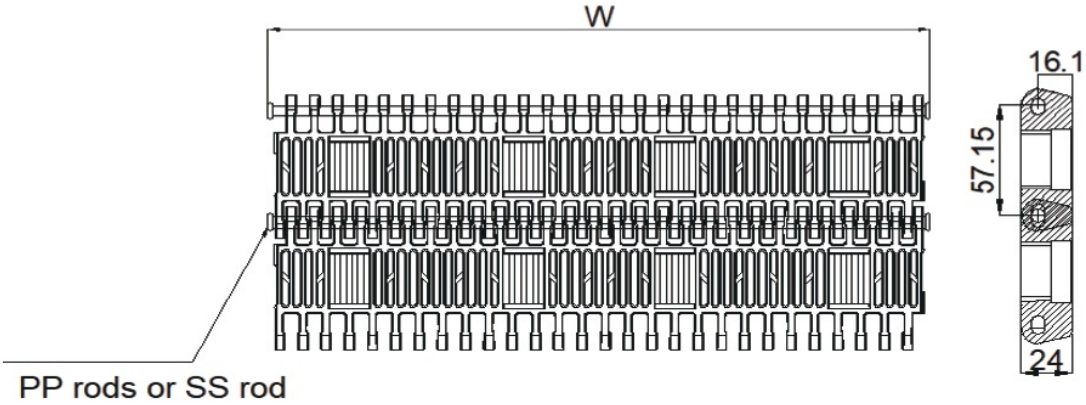

P105

Standard Width

mm	152.4	304.8	457.2	609.6	762	914.4	1066.8	152.4*N
inch	*6*	*12*	*18*	*24*	*30*	*36*	*42*	*42*N*

Real belt width are in most cases 0.1% to 0.3% wider or less

4809 Transfer Combs

Code	4809TC150

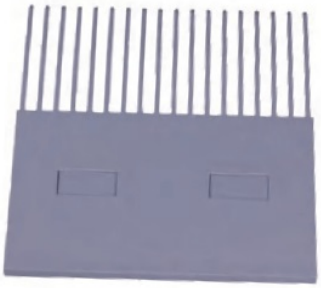

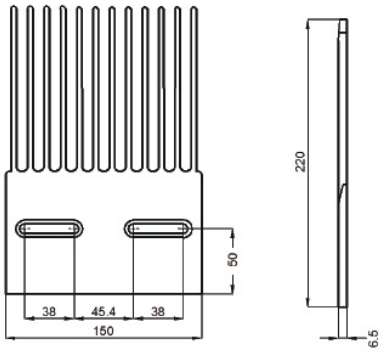

MPB Series

MPB- Flat Top

- Pitch:50.8mm
- Minimum Width:152.4mm
- Open Area:0%
- Thickness:16 mm
- Rod:7.6 mm
- Color Option: White, Blue

Belt Data

Belt Material	PP	Acetal	
Rod Material	PP	PBT	PP
Tensile strength (N/M)	8800	15800	8800
Temperature range °C	5-105	-30-90	5-93
Belt weight KG/m²(Flat Top)	7.3	10.4	10.4
Belt weight KG/m²(Perforated)	7.2	10.3	0.3
Belt weight KG/m²(Flush Grid)	6.9	9.8	9.8

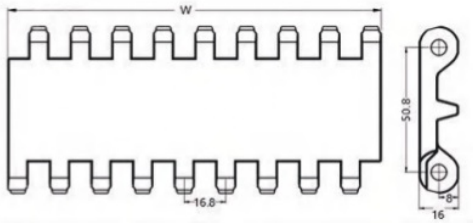

P106

Standard Width

mm	152.4	304.8	457.2	609.6	762	914.4	1066.8	152.4*N
inch	*6*	*12*	*18*	*24*	*30*	*36*	*42*	*6*N*

Nonstandard widths are offered in increments of 16.9mm (0.66")
Real belt width are in most cases 0.1% to 0.3% wider or less

MPB- Perforated

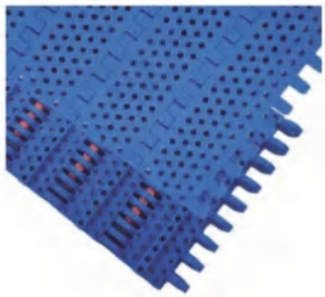

- Pitch:50.8mm
- Minimum Width:152.4mm
- Open Area:20%
- Thickness:16 mm
- Rod:7.6 mm
- Color Option: White, Blue

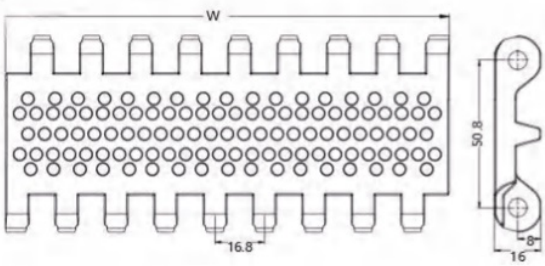

Standard Width

mm	152.4	304.8	457.2	609.6	762	914.4	1066.8	152.4*N
inch	*6*	*12*	*18*	*24*	*30*	*36*	*42*	*6*N*

Nonstandard widths are offered in increments of 16.9mm (0.66")
Real belt width are in most cases 0.1% to 0.3% wider or less

MPB- Flush Grid

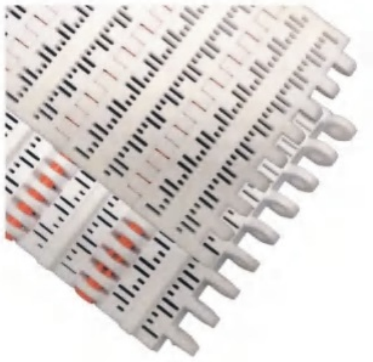

- Pitch:50.8mm
- Minimum Width:152.4mm
- Open Area:18%
- Thickness:16 mm
- Rod:7.6 mm
- Color Option: White, Blue

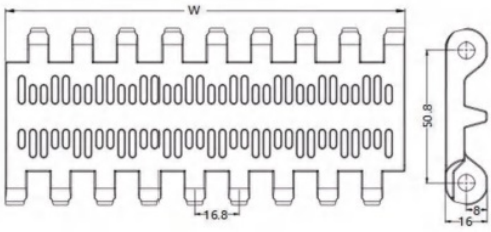

Standard Width

mm	152.4	304.8	457.2	609.6	762	914.4	1066.8	152.4*N
inch	*6*	*12*	*18*	*24*	*30*	*36*	*42*	*6*N*

Nonstandard widths are offered in increments of 16.9mm (0.66")
Real belt width are in most cases 0.1% to 0.3% wider or less

MPB- Hook

Standard height :100mm, 150mm

MPB- Flat Top (Flush Grid) with cleats

Standard height of cleats 25mm,50mm,75mm,100mm
(the height of Hook shape :100mm,150mm)

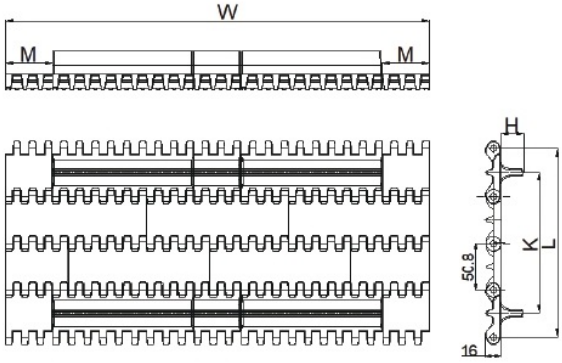

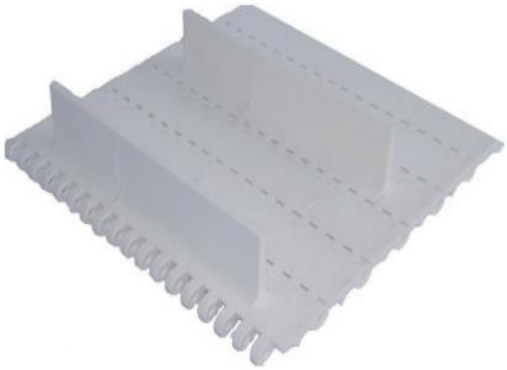

Confirm the size as below :

L	The total length of the belt
M	Cleat side -indent (single side)
H	The height of cleat
K	Distance between two cleats
W	The width of the belt

Standard width refer MPB Flat Top

MPB- Flat top (Flush Grid) with cleats +side walls

Standard height of cleats : 25mm,50mm,75mm,100mm
Standard height of sidewalls: 25mm,50mm,75mm,100mm
(the height of Hook shape :100mm,150mm)

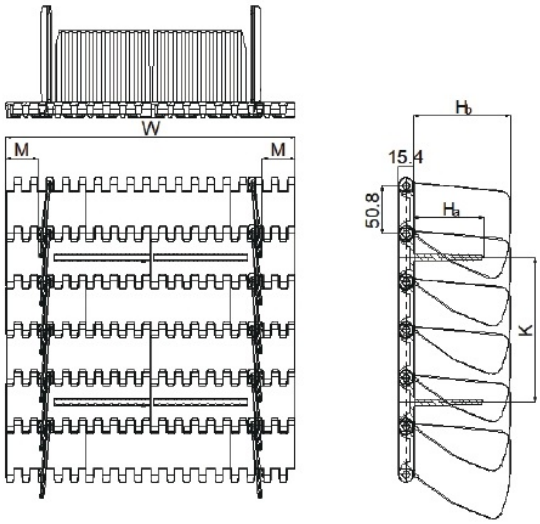

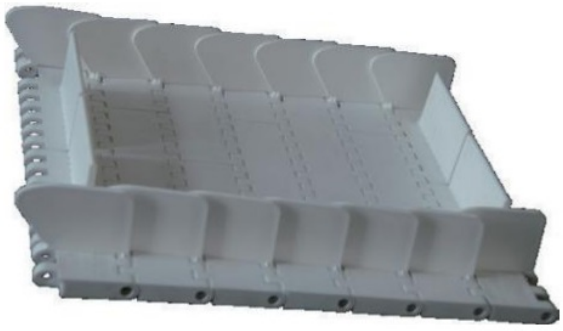

L	The total length of the belt
M	Cleat side -indent (single side)
H	The height of cleat
K	Distance between two cleats
W	The width of the belt

Standard width refer MPB Flat Top

OPB Series

OPB- Flat Top

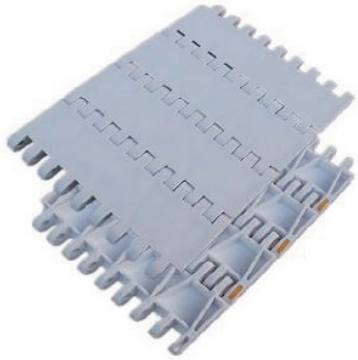

- Pitch:50.8mm
- Minimum Width:152.4mm
- Open Area:0%
- Thickness:15.4 mm
- Rod:7.6 mm
- Color Option: White, Blue

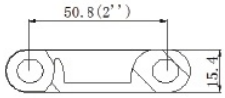

Belt Data

Belt Material	PP	Acetal	
Rod Material	PP	PBT	PP
Tensile strength (N/M)	8800	15800	8800
Temperature range °C	5-105	-30-90	5-93
Belt weight KG/m²(Flat Top)	7.3	10.4	10.4
Belt weight KG/m²(Perforated)	7.2	10.3	10.3
Belt weight KG/m²(Flush Grid)	6.9	9.8	9.8
Belt weight KG/m²(Flush Grid-S)	6.9	9.8	9.8

P107

Standard Width

mm	152.4	304.8	457.2	609.6	762	914.4	1066.8	152.4*N
inch	*6*	*12*	*18*	*24*	*30*	*36*	*42*	*6*N*

Nonstandard widths are offered in increments of 16.9mm (0.66")
Real belt width are in most cases 0.1% to 0.3% wider or less

OPB- Perforated

- Pitch:50.8mm
- Minimum Width:152.4mm
- Open Area:20%
- Thickness:15.4 mm
- Rod:7.6 mm
- Color Option: White, Blue

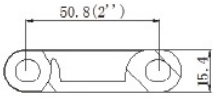

Standard Width

mm	152.4	304.8	457.2	609.6	762	914.4	1066.8	152.4*N
inch	*6*	*12*	*18*	*24*	*30*	*36*	*42*	*6*N*

Nonstandard widths are offered in increments of 16.9mm (0.66")
Real belt width are in most cases 0.1% to 0.3% wider or less

OPB- Flush Grid

•Pitch:50.8mm
•Minimum Width:152.4mm
•Open Area:23%
•Thickness:15.4 mm
•Rod:7.6 mm
•Color Option: White, Blue

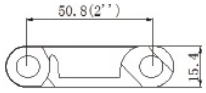

Standard Width

mm	152.4	304.8	457.2	609.6	762	914.4	1066.8	152.4*N
inch	*6*	*12*	*18*	*24*	*30*	*36*	*42*	*6*N*

Nonstandard widths are offered in increments of 16.9mm (0.66")
Real belt width are in most cases 0.1% to 0.3% wider or less

OPB- Flush Grid-S

•Pitch:50.8mm
•Minimum Width:152.4mm
•Open Area:18%
•Thickness:15.4 mm
•Rod:7.6 mm
•Color Option: White, Blue

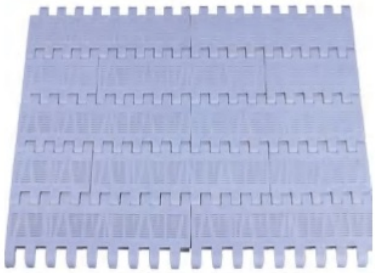

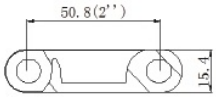

Standard Width

mm	152.4	304.8	457.2	609.6	762	914.4	1066.8	152.4*N
inch	*6*	*12*	*18*	*24*	*30*	*36*	*42*	*6*N*

Nonstandard widths are offered in increments of 16.9mm (0.66")
Real belt width are in most cases 0.1% to 0.3% wider or less

OPB-Hook

Standard height : 100mm,150mm

OPB- Flat Top(Flush grid) with cleats

Standard height of cleats 25mm,50mm,75mm,100mm,150mm
(the height of Hook shape :100mm,150mm)

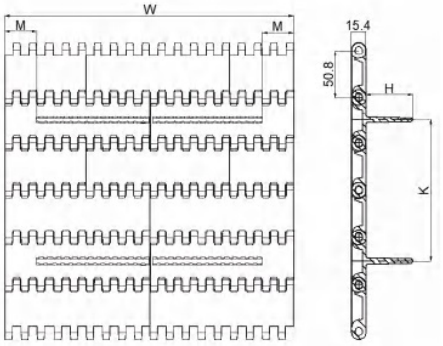

Confirm the size as below :

L	The total length of the belt
M	Cleat side -indent (single side)
H	The height of cleat
K	Distance between two cleats
W	The width of the belt

P107

Standard width refer OPB Flat Top

OPB- Flat Top(Flush grid) with cleats and sidewalls

Standard height of cleats : 25mm,50mm,75mm,100mm
Standard height of sidewalls: 25mm,50mm,75mm,100mm
(the height of Hook shape :100mm)

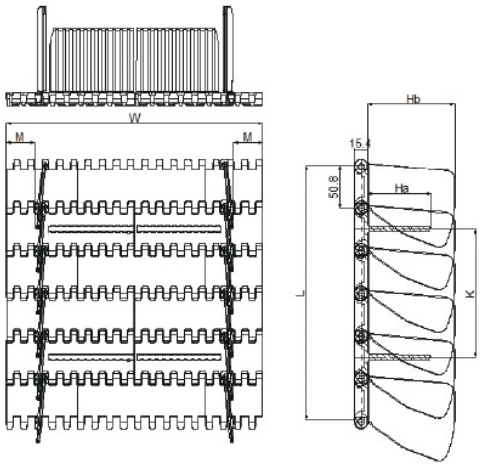

Confirm the size as below :

L	The total length of the belt
M	Cleat side -indent (single side)
H	The height of cleat
K	Distance between two cleats
W	The width of the belt

Standard width refer OPB Flat Top

Sprocket

for X1270 series
Material: PA6 (natural white)
Wear resistance and
high performance

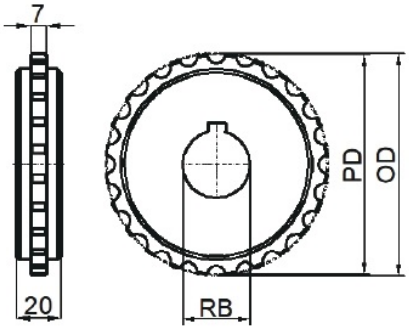

Sprocket Code	Number of Teeth	Round Bore	Pitch Diameter	Outside Diameter	Hub Dia
		mm	mm	mm	mm
Machined Drive sprockets -X1270					
X1270T12RB20-01	12	20	49.8	50.5	20
X1270T12RB25-01		25			
X1270T15RB20-01	15	20	62	62.8	
X1270T15RB25-01		25			
X1270T15RB30-01		30			
X1270T20RB25-01	20	25	82.5	82.9	
X1270T20RB30-01		30			
X1270T20RB35-01		35			
X1270T24RB25-01	24	25	98.8	99.3	
X1270T24RB30-01		30			
X1270T24RB35-01		35			
X1270T32RB25-01	32	25	131.6	132	
X1270T32RB30-01		30			
X1270T32RB35-01		35			

***Machined return sprockets pls mention "-05" ,e.g. X1270T20RB30-05**

Sprocket

for X2120 series
Material: PA6 (natural white)
Wear resistance and
high performance

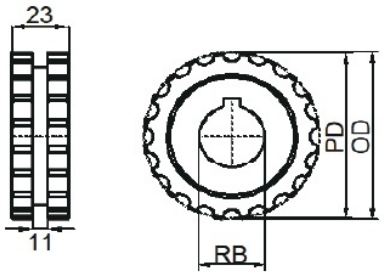

Sprocket Code	Number of Teeth	Round Bore	Pitch Diameter	Outside Diameter	Hub Dia
		mm	mm	mm	mm
Machined Drive sprockets - X2120					
X2120T16RB25-01	16	25	64.07	64.5	40
X2120T16RB30-01		30			
X2120T16RB35-01		35			
X2120T16RB40-01		40			
X2120T20RB25-01	20	25	79.9	80.2	
X2120T20RB30-01		30			
X2120T20RB35-01		35			
X2120T20RB40-01		40			
X2120T24RB25-01	24	25	95.77	95.9	
X2120T24RB30-01		30			
X2120T24RB35-01		35			
X2120T24RB40-01		40			
X2120T28RB25-01	28	25	111.64	111.7	
X2120T28RB30-01		30			
X2120T28RB35-01		35			
X2120T28RB40-01		40			
X2120T32RB25-01	32	25	127.5	127.5	
X2120T32RB30-01		30			
X2120T32RB35-01		35			
X2120T32RB40-01		40			

***Machined return sprockets pls mention "-05" ,e.g. X2120T28RB40-05**

Sprocket

for X1100 series
Material: PA-Black

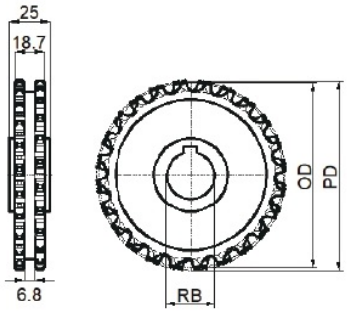

Sprocket Code	Number of Teeth	Bore	Pitch Diameter	Outside Diameter	Hub Diamater
		mm	mm	mm	mm
Molded Drive Sprockets -X1100					
X1100T16RB30-03	16	30	75.89	78.8	18.7
X1100T16RB35-03		35			
X1100T16SQ40-03		40*40			
X1100T24RB20-03	24	20	116.5	118.2	
X1100T24RB25-03		25			
X1100T24RB35-03		35			
X1100T24SQ40-03		40*40			
X1100T32RB30-03	32	30	155	157.7	
X1100T32RB40-03		40			
X1100T32SQ40-03		40*40			

Sprocket

for X1500 series
Material: PA6
Wear resistance and
high performance
Screws in stainless steel

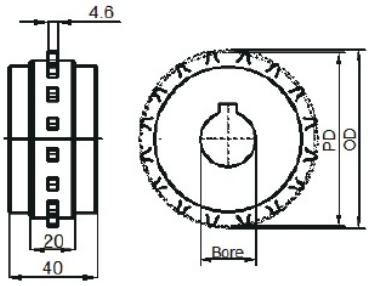

Sprocket Code	Number of Teeth	Round Bore	Pitch Diameter	Outside Diameter	S	Hub Dia
		mm	mm	mm	mm	mm
Split,Machined Drive sprockets - X1500						
X1500T16RB20-01-ST	16	20	79.4	80.7	35.4	40
X1500T16RB25-01-ST		25				
X1500T24RB25-01-ST	24	25	118.7	120	55	
X1500T24RB30-01-ST		30				
X1500T24RB35-01-ST		35				
X1500T24RB40-01-ST		40				
X1500T32RB25-01-ST	24	25	158.1	159.4	74.8	
X1500T32RB30-01-ST		30				
X1500T32RB35-01-ST		35				
X1500T32RB40-01-ST		40				

***Split,Machined return sprockets pls mention "-05" ,e.g. X1500T24RB40-05-ST**

Sprocket

for X5935 series
Material: PA6 (natural white)

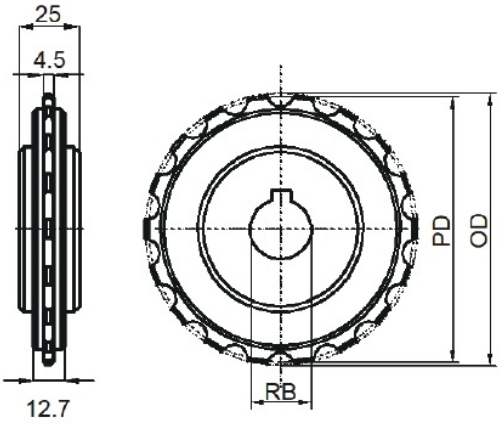

Sprocket Code	Number of Teeth	Round Bore	Pitch Diameter	Outside Diameter	Hub Dia
		mm	mm	mm	mm
Machined Drive sprockets -X5935					
X5935T10RB20-01	10	20	61.6	63.9	44
X5935T10RB25-01		25			
X5935T12RB25-01	12	25	73.6	75.7	
X5935T12RB30-01		30			
X5935T12RB35-01		35			
X5935T16RB25-01	16	25	97.6	99.9	
X5935T16RB30-01		30			
X5935T16RB35-01		35			
X5935T18RB25-01	18	25	109.7	112	
X5935T18RB30-01		30			
X5935T18RB35-01		35			
X5935T20RB25-01	20	25	121.8	124.2	
X5935T20RB30-01		30			
X5935T20RB35-01		35			
X5935T24RB25-01	24	25	145.9	149	
X5935T24RB30-01		30			
X5935T24RB35-01		35			
X5935T25RB25-01	25	25	152	154.7	
X5935T25RB30-01		30			

***Machined return sprockets pls mention "-05" ,e.g. X5935T20RB30-05**

Sprockets

for X8505 series
Material: PA6 (natural white)
Wear resistance and
high performance

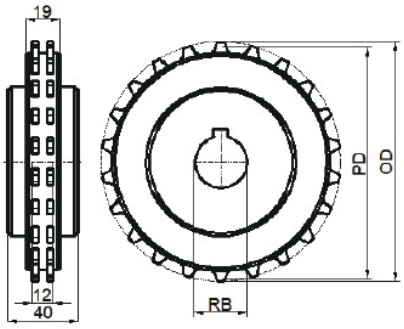

Sprocket Code	Number of Teeth	Round Bore	Pitch Diameter	Outside Diameter	Hub Diamater
		mm	mm	mm	mm
Machined Drive sprockets -X8505					
X8505T14RB25-01	14	25	85.6	88.6	40
X8505T14RB30-01		30			
X8505T14RB35-01		35			
X8505T20RB25-01	20	25	121.8	122.8	
X8505T20RB30-01		30			
X8505T20RB35-01		35			
X8505T20RB40-01		40			
X8505T22RB25-01	22	25	133.9	135.2	
X8505T22RB30-01		30			
X8505T22RB35-01		35			
X8505T22RB40-01		40			
X8505T24RB25-01	24	25	146	147.6	
X8505T24RB30-01		30			
X8505T24RB35-01		35			
X8505T24RB40-01		40			

***Machined return sprockets pls mention "-05" ,e.g. X8505T22RB25-05**

Sprocket

for X1000 series
Material: PA6 (natural white)
Wear resistance and high performance

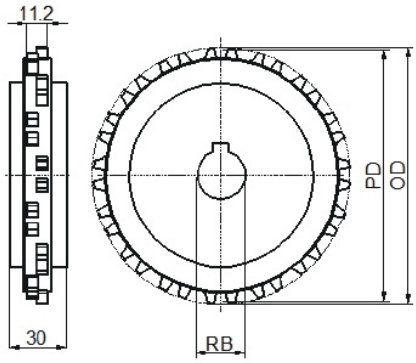

Sprocket Code	Number of Teeth	Round Bore	Pitch Diameter	Outside Diameter	S	Hub Dia
		mm	mm	mm	mm	mm
Machined Drive sprockets - X1000						
X1000T12RB25-01	12	25	98	99	45.2	30
X1000T12RB30-01		30				
X1000T16RB25-01	16	25	130.1	130.2	61.4	
X1000T16RB30-01		30				
X1000T16RB35-01		35				
X1000T18RB25-01	18	25	146.3	146.5	69.5	
X1000T18RB30-01		30				
X1000T18RB35-01		35				
X1000T18RB40-01		40				
X1000T20RB25-01	20	25	162.4	162.8	77.6	
X1000T20RB30-01		30				
X1000T20RB35-01		35				
X1000T20RB40-01		40				

***Machined return sprockets pls mention "-05" ,e.g. X1000T18RB35-05**

Sprocket

for X1000 series
Material: PA-Black
Screws in stainless steel

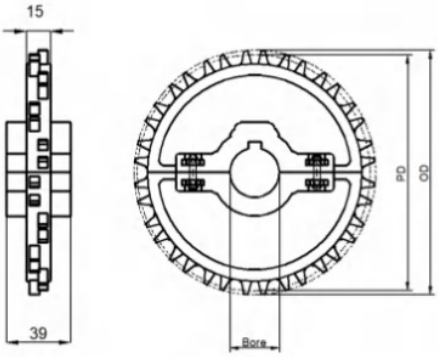

Sprocket Code	Number of Teeth	Round Bore	Pitch Diameter	Outside Diameter	S	Hub Dia
		mm	mm	mm	mm	mm
Split, Molded Drive Sprockets - X1000						
X1000T16RB30-03	16	30	130.1	130.2	61.4	39
X1000T16RB40-03		40				
X1000T18RB30-03	18	30	146.3	146.5	69.5	
X1000T18RB40-03		40				
X1000T20RB30-03	20	30	162.4	162.8	77.6	
X1000T20RB40-03		40				

Sprocket

for X700 series
Material: PA6 (natural white)
Wear resistance and
high performance

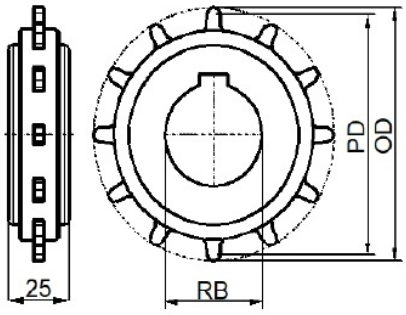

Sprocket Code	Number of Teeth	Round Bore	Pitch Diameter	Outside Diameter	Hub Dia
		mm	mm	mm	mm
Machined Drive sprockets - X700					
X700T12RB25-01	12	25	98.14	99	30
X700T12RB30-01		30			
X700T12RB35-01		35			
X700T12RB40-01		40			
X700T16RB25-01	16	25	130.2	131	
X700T16RB30-01		30			
X700T16RB35-01		35			
X700T16RB40-01		40			
X700T18RB25-01	18	25	146.27	147	
X700T18RB30-01		30			
X700T18RB35-01		35			
X700T18RB40-01		40			

***Square bores are also available for some sizes . pls contact sales**
***Machined return sprockets pls mention "-05" ,e.g. X700T16RB40-05**

Sprocket

for X2500series
Material: PA6 (natural white)
Wear resistance and
high performance

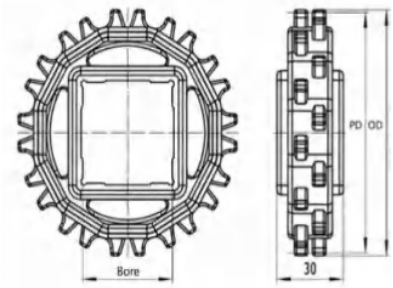

Sprocket Code	Number of Teeth	Round Bore	Pitch Diameter	Outside Diameter	Hub Dia
		mm	mm	mm	mm
Molded Drive Sprockets -X 2500					
X2500T8RB25-03	8	25	66	67	30
X2500T8RB30-03		30			
X2500T8RB40-03		40			
X2500T10RB25-03	10	25	82	83	
X2500T10RB30-03		30			
X2500T10RB35-03		35			
X2500T10RB40-03		40			
X2500T10SQ40-03		40*40			
X2500T12RB25-03	12	25	98	99	
X2500T12RB30-03		30			
X2500T12RB35-03		35			
X2500T12RB40-03		40			
X2500T12SQ40-03		40*40			
X2500T18RB25-03	18	25	146	147	
X2500T18RB30-03		30			
X2500T18RB35-03		35			
X2500T18RB40-03		40			
X2500T18SQ40-03		40*40			

Sprocket

for X7100 series
Material: PA6 (natural white)
Wear resistance and
high performance

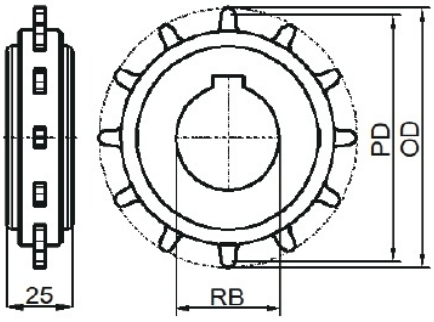

Sprocket Code	Number of Teeth	Round Bore	Pitch Diameter	Outside Diameter	Hub Dia
		mm	mm	mm	mm
Machined Drive sprockets -X 7100					
X7100T10RB20-01	10	20	82.2	114.4	25
X7100T10RB25-01		25			
X7100T10RB30-01		30			
X7100T12RB25-01	12	25	98.2	98.8	
X7100T12RB30-01		30			
X7100T12RB35-01		35			
X7100T12RB40-01		40			
X7100T15RB25-01	15	25	122.2	123.5	
X7100T15RB30-01		30			
X7100T15RB35-01		35			
X7100T15RB40-01		40			
X7100T18RB25-01	18	25	146.3	148.1	
X7100T18RB30-01		30			
X7100T18RB35-01		35			
X7100T18RB40-01		40			

***Square bores are also available for some sizes . pls contact sales**
***Machined return sprockets pls mention "-05" ,e.g. X7100T15RB40-05**

Sprocket

for X7300 series
Material: PA6 (natural white)
Wear resistance and
high performance

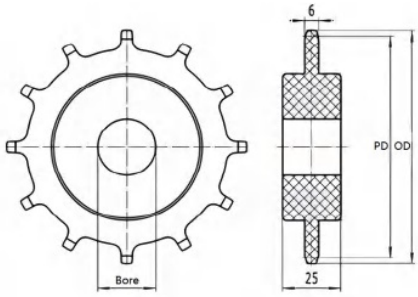

Sprocket Code	Number of Teeth	Round Bore	Pitch Diameter	Outside Diameter	Hub Dia
		mm	mm	mm	mm
Machined Drive sprockets -X7300					
X7300T10RB20-01	10	20	82.2	114.4	25
X7300T10RB25-01		25			
X7300T10RB30-01		30			
X7300T12RB25-01	12	25	98.2	98.8	
X7300T12RB30-01		30			
X7300T12RB35-01		35			
X7300T12RB40-01		40			
X7300T15RB25-01	15	25	122.2	123.5	
X7300T15RB30-01		30			
X7300T15RB35-01		35			
X7300T15RB40-01		40			
X7300T18RB25-01	18	25	146.3	148.1	
X7300T18RB30-01		30			
X7300T18RB35-01		35			
X7300T18RB40-01		40			

***Square bores are also available for some sizes . pls contact sales**
***Machined return sprockets pls mention "-05" ,e.g. X7300T15RB25-05**

Sprocket

for X2253 series
Material: PA6 (natural white)
Wear resistance and
high performance

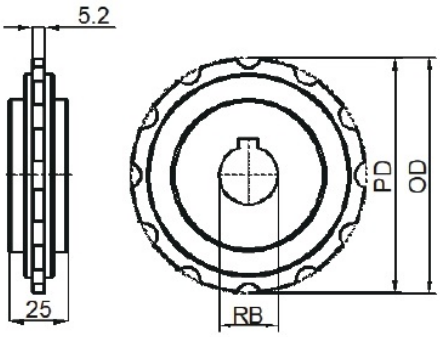

Sprocket Code	Number of Teeth	Round Bore	Pitch Diameter	Outside Diameter	S	Hub Dia
		mm	mm	mm	mm	mm
Machined Drive sprockets -X2253						
X2253T8RB20-01	8	20	66.4	66.6	28.8	25
X2253T8RB30-01		30				
X2253T10RB25-01	10	25	82.2	82.4	36.8	
X2253T10RB40-01		40				
X2253T12RB20-01	12	20	98.1	98.3	44.7	
X2253T12RB25-01		25				
X2253T12RB40-01		40				
X2253T16RB30-01	16	30	130.2	130.4	60.8	
X2253T16RB50-01		50				
X2253T18RB30-01	18	30	146.3	146.5	68.8	
X2253T18RB50-01		50				

***Machined return sprockets pls mention "-05" ,e.g. 2253T8RB20-05**

Sprocket

for X2540 series
Material: PA6 (natural white)
Wear resistance and
high performance

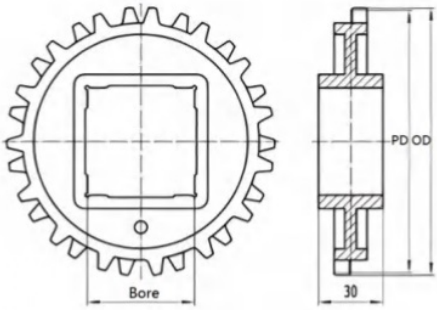

Sprocket Code	Number of Teeth	Round Bore	Pitch Diameter	Outside Diameter	Hub Dia
		mm	mm	mm	mm
Machined Drive sprockets -X2540					
X2540T12RB20-01	12	20	98.1	98.8	35
X2540T12RB25-01		25			
X2540T12RB30-01		30			
X2540T16RB25-01	16	25	130.2	131.9	
X2540T16RB30-01		30			
X2540T16RB35-01		35			
X2540T16RB40-01		40			
X2540T20RB20-01	20	20	162.4	164.4	
X2540T20RB25-01		25			
X2540T20RB30-01		30			
X2540T20RB35-01		35			
X2540T20RB40-01		40			
X2540T24RB20-01	24	20	194.6	196.3	
X2540T24RB25-01		25			
X2540T24RB30-01		30			
X2540T24RB35-01		35			
X2540T24RB40-01		40			

***Square bores are also available for some sizes . pls contact sales**
***Machined return sprockets pls mention "-05" ,e.g. X2540T16RB30-05**

Sprocket

for X7705 series
Material: PA6 (natural white)
Wear resistance and
high performance

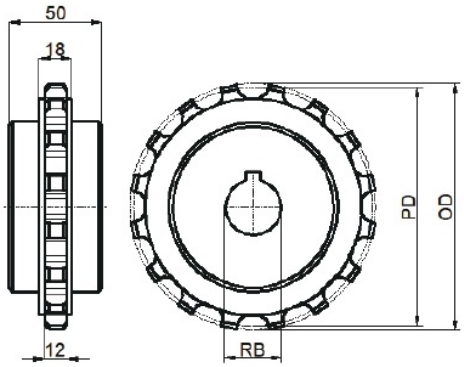

Sprocket Code	Number of Teeth	Round Bore	Pitch Diameter	Outside Diameter	Hub Dia
		mm	mm	mm	mm
Machined Drive sprockets - X7705					
X7705T14RB25-01	14	25	114.1	114.5	50
X7705T14RB30-01		30			
X7705T14RB35-01		35			
X7705T14RB40-01		40			
X7705T16RB25-01	16	25	130.2	130.6	
X7705T16RB30-01		30			
X7705T16RB35-01		35			
X7705T16RB40-01		40			
X7705T18RB25-01	18	25	146.3	146.9	
X7705T18RB30-01		30			
X7705T18RB35-01		35			
X7705T18RB40-01		40			
X7705T21RB25-01	21	25	170.4	170.9	
X7705T21RB30-01		30			
X7705T21RB35-01		35			
X7705T21RB40-01		40			

***Square bores are also available for some sizes . pls contact sales**
***Machined return sprockets pls mention "-05" ,e.g. X7705T14RB25-05**

Sprocket

for X900 series
Material: PA-White

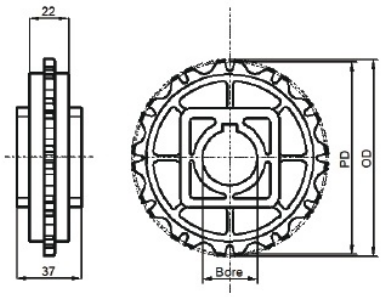

Sprocket Code	Number of Teeth	Bore	Pitch Diameter	Outside Diameter	Hub Dia
		mm	mm	mm	mm
Molded Drive Sprockets - X900					
X900T9RB30-03	9	30	79.5	81	37
X900T9RB35-03		35			
X900T9SQ40-03		40*40			
X900T12RB25-03	12	25	105	107	
X900T12RB30-03		30			
X900T12RB35-03		35			
X900T12SQ38.1-03		38.1*38.1			
X900T12SQ40-03		40*40			
X900T18RB25-03	18	25	156.6	160	
X900T18RB30-03		30			
X900T18RB35-03		35			
X900T18RB40-03		40			
X900T18RB60-03		60			
X900T18SQ38.1-03		38.1*38.1			
X900T18SQ40-03		40*40			
X900T18SQ60-03		60*60			

Machined sprockets

Material: PA

Wear resistance and high performanc

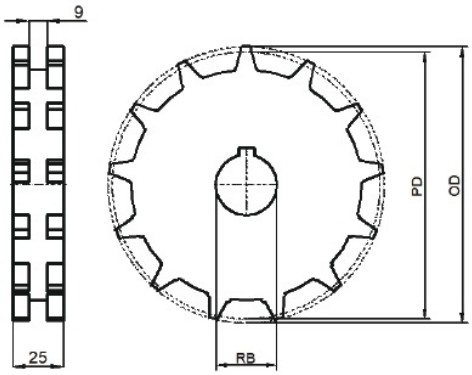

Sprocket

Sprockets for X2556 series

Sprocket Code	Number of Teeth	RB	PD	OD	Hub Dia
		mm	mm	mm	mm
Machined Drive Sprockets - X2556					
X2556T8RB30-01	8	30	83.0	86.5	25
X2556T8RB40-01		40			
X2556T10RB30-01	10	30	102.8	106.5	
X2556T10RB40-01		40			
X2556T13RB30-01	13	30	132.7	137.5	
X2556T13RB40-01		40			
X2556T15RB30-01	15	30	152.7	158.0	
X2556T15RB40-01		40			
X2556T16RB30-01	16	30	162.8	168.0	
X2556T16RB40-01		40			

Square bore is available for T13 ,15 ,16

Sprocket

Sprockets for X2556-SR series

Machined sprockets

Material: PA

Wear resistance and high performanc

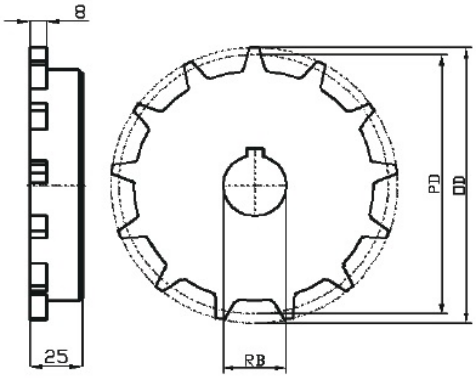

Sprocket Code	Number of Teeth	RB	PD	OD	Hub Dia
		mm	mm	mm	mm
Machined Drive Sprockets -X2556-SR					
X2556-SRT8RB30-01	8	30	83.0	86.5	25
X2556-SRT8RB40-01		40			
X2556-SRT10RB30-01	10	30	102.8	106.5	
X2556-SRT10RB40-01		40			
X2556-SRT13RB30-01	13	30	132.7	137.5	
X2556-SRT13RB40-01		40			
X2556-SRT15RB30-01	15	30	152.7	158.0	
X2556-SRT15RB40-01		40			
X2556-SRT16RB30-01	16	30	162.8	168.0	
X2556-SRT16RB40-01		40			

Square bore is available for T13 ,15 ,16

Machined Idler

Material: PA

Wear resistance and high performance

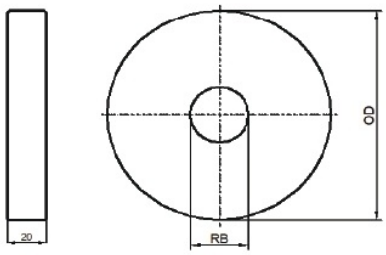

IDler

Idler for X2556 & X2556-SR series

Sprocket Code	Number of Teeth	RB	PD	OD	Hub Diam
		mm	mm	mm	mm
Machined Idler -X2556 & X2556-SR					
X2556T8RB30-02	8	30	83.0	86.5	25
X2556T8RB40-02		40			
X2556T10RB30-02	10	30	102.8	106.5	
X2556T10RB40-02		40			
X2556T13RB30-02	13	30	132.7	137.5	
X2556T13RB40-02		40			
X2556T15RB30-02	15	30	152.7	158.0	
X2556T15RB40-02		40			
X2556T16RB30-02	16	30	162.8	168.0	
X2556T16RB40-02		40			

Square bore is available for T13 ,15 ,16

Sprockets Installation position and quantity

X2556 Sprocket ---- A

X2556-SR Sprocket ----B

	Quantity			
Width	X2556	X2556-SR		
mm	A	A	B	Idler
255	2			
340	3	1	1	1
425	4	2	1	1
510	5	3	1	1
595	6	4	1	1
680	7	5	1	1
765	8	6	1	1
850	9	7	1	1

Correct

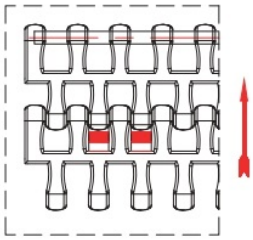

Incorrect

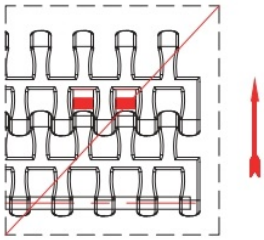

Sprocket

for X4809 series
Material: PA- BLACK
Wear resistance and
high performance

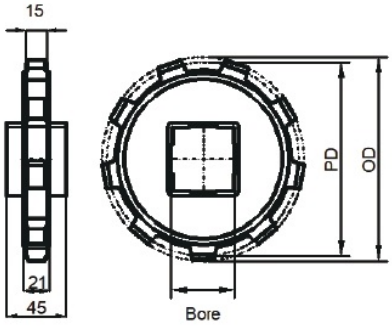

Sprocket Code	Number of Teeth	Bore	Pitch Diameter	Outside Diameter	Hub Diameter
		mm	mm	mm	mm
Molded Drive Sprockets - X4809					
4809T9RB30-03	9	30	163	167.46	47.5
4809T9RB35-03		35			
4809T9RB40-03		40			
4809T9SQ50-03		50*50			
4809T14RB40-03	14	40	258.5	260.47	
4809T14RB50-03		50			
4809T14RB60-03		60			
4809T14SQ80-03		80*80			

Sprocket

for X5032 series
Material: PA6 -Grey

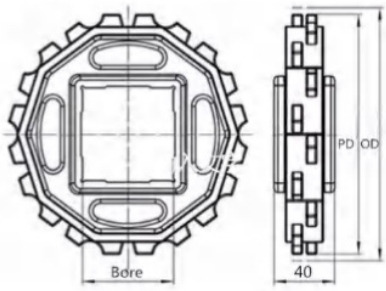

Sprocket Code	Number of Teeth	Bore	Pitch Diameter	Outside Diameter	Hub Diameter
		mm	mm	mm	mm
Molded Drive Sprockets - X5032					
5032T10RB30-03	10	30	164.4	165.3	40
5032T10SQ38.1-03		38.1*38.1			
5032T10SQ40-03		40*40			
5032T10SQ60-03		60*60			
5032T12RB30-03	12	30	196.3	198.5	
5032T12RB40-03		40			
5032T12SQ40-03		40*40			
5032T12SQ60-03		60*60			

Sprocket

for X400 series
Material: PA6
Wear resistance and high performance

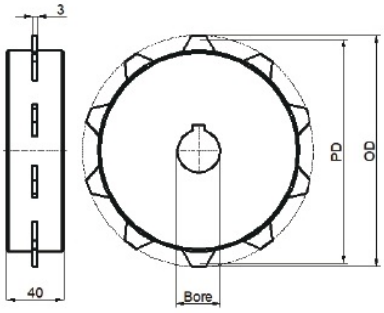

Sprocket Code	Number of Teeth	Bore	Pitch Diameter	Outside Diameter	Hub Dia
		mm	mm	mm	mm
Machined Drive Sprockets - X400					
X400T8RB25-01	8	25	128.2	132.2	40
X400T8RB30-01		30			
X400T8RB35-01		35			
X400T8RB40-01		40			
X400T10RB25-01	10	25	160.4	164.4	
X400T10RB30-01		30			
X400T10RB35-01		35			
X400T10RB40-01		40			
X400T12RB25-01	12	25	196.3	196.9	
X400T12RB30-01		30			
X400T12RB35-01		35			
X400T12RB40-01		40			

***Square Bores are also available for each size . e.g. X400T10SQ40-01**
***Machined return sprockets pls mention "-05" ,e.g. X400T12RB35-05**

Sprocket

for MPB series
Material: PA6

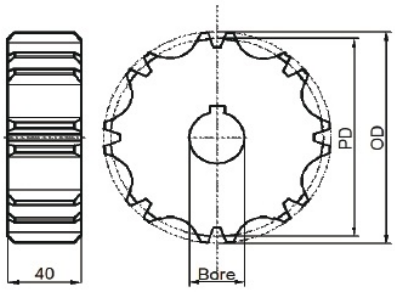

Sprocket Code	Number of Teeth	Round Bore	Pitch Diameter	Outside Diameter	Hub Dia
		mm	mm	mm	mm
Machined Drive sprockets - MPB					
MPBT8RB25-01	8	25	123.4	132.8	40
MPBT8RB30-01		30			
MPBT8RB35-01		40			
MPBT10RB25-01	10	25	161.7	164.4	40
MPBT10RB30-01		30			
MPBT10RB35-01		35			
MPBT10RB40-01		40			
MPBT12RB25-01	12	25	191	196	40
MPBT12RB30-01		30			
MPBT12RB35-01		35			
MPBT12RB40-01		40			

***Square bores are also available for some sizes . pls contact sales**
***Machined return sprockets pls mention "-05" ,e.g. MPBT12RB25-05**

Sprocket Type	Number of Teeth	BORE	Pitch Diameter	Outside Diameter	Hub Dia
		mm	mm	mm	mm
Molded Drive Sprockets - MPB					
MPBT8SQ40-03	8	40*40	130	132.7	38
MPBT10SQ40-03	10	40*40	161.7	164.4	38
MPBT12SQ40-03	12	40*40	191	196	42

Sprocket

for OPB series
Material: PA6 (natural white)
Wear resistance and
high performance

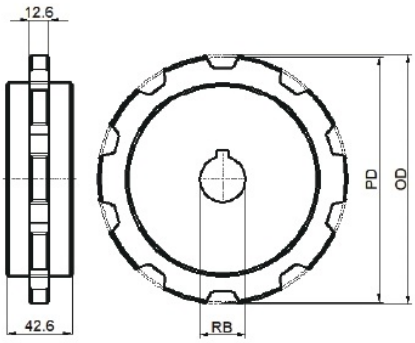

Sprocket Code	Number of Teeth	Round Bore	Pitch Diameter	Outside Diameter	Hub Dia
		mm	mm	mm	mm
Machined Drive sprockets - OPB					
OPBT8RB25-01	8	25	130	132.7	42.6
OPBT8RB30-01		30			
OPBT8RB40-01		40			
OPBT10RB25-01	10	25	161.7	164.4	
OPBT10RB30-01		30			
OPBT10RB35-01		35			
OPBT10RB40-01		40			
OPBT12RB25-01	12	25	193.6	196.3	
OPBT12RB30-01		30			
OPBT12RB35-01		35			
OPBT12RB40-01		40			
OPBT14RB30-01	14	30	2259	228.3	
OPBT14RB35-01		35			
OPBT14RB40-01		40			
OPBT14RB45-01		45			

***Square bores are also available for some sizes . pls contact sales**
***Machined return sprockets pls mention "-05" ,e.g. OPBT12RB40-05**

Sprocket

for OPB series
Material: PA-White

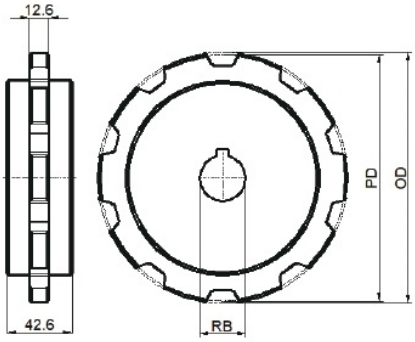

Sprocket Type	Number of Teeth	Round Bore	Pitch Diameter	Outside Diameter	Hub Dia
		mm	mm	mm	mm
Molded Drive Sprockets - OPB					
OPBT8RB30-03	8	30	130	132.7	42.6
OPBT8RB40-03		40			
OPBT8SQ40-03		40*40			
OPBT10RB30-03	10	30	161.7	164.4	
OPBT10RB35-03		35			
OPBT10RB40-03		40			
OPBT10SQ40-03		40*40			

Z-Proflie

WR-1

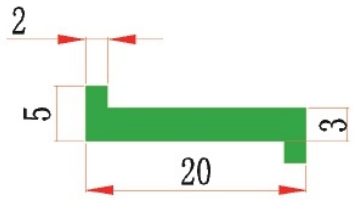

WR-2

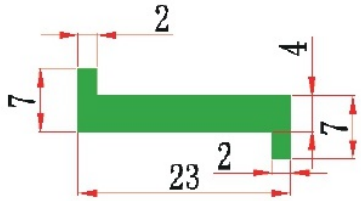

WR-3

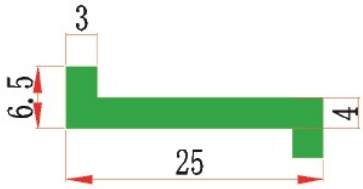

J-Profile

WR-8

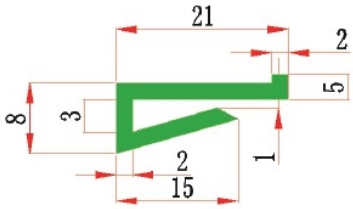

WR-9

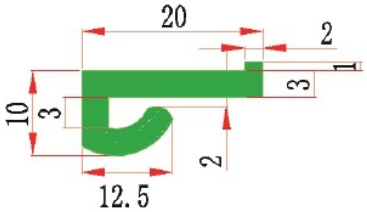

WR-10

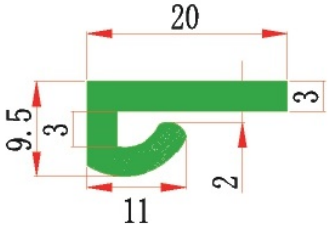

WR-11

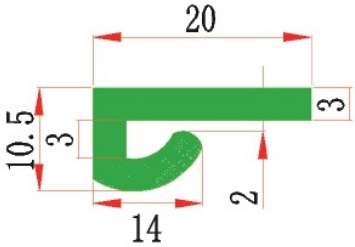

WR-9-2

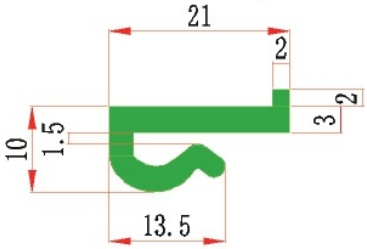

WR-10-2

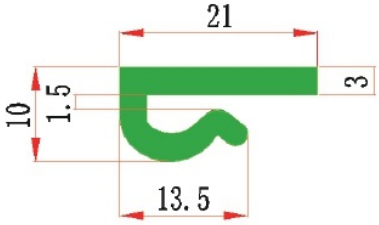

WR-12

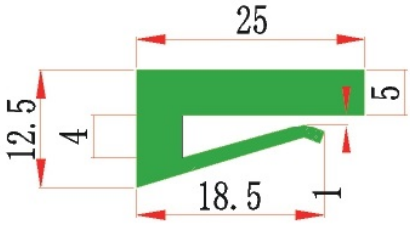

WR-13

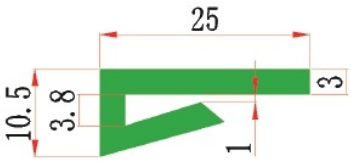

WR-14

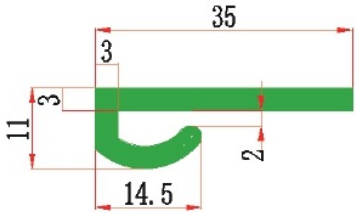

WR-23

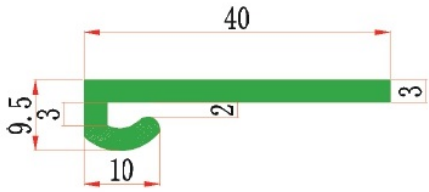

WR-24

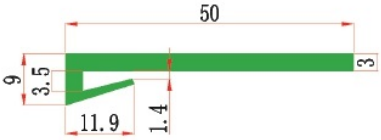

WR-25

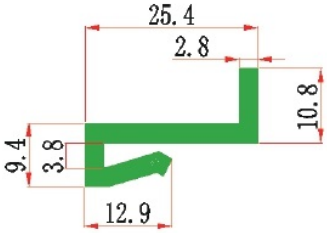

L-Profile

WR-4

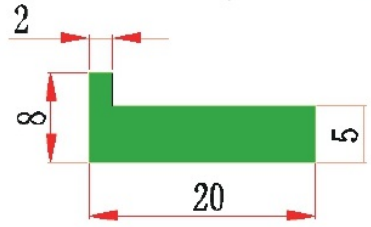

WR-5

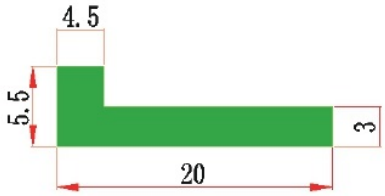

WR-6

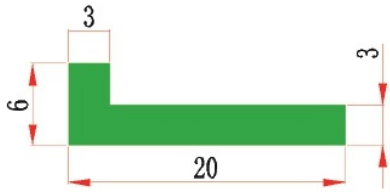

WR-7

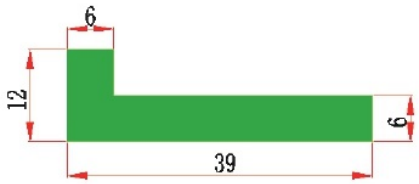

Bar cap and cover

WR-15

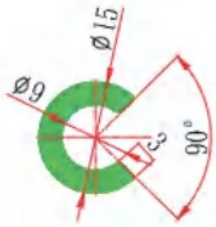

WR-15-2

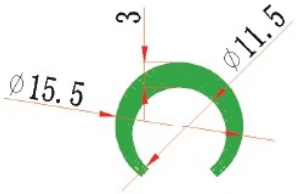

WR-16

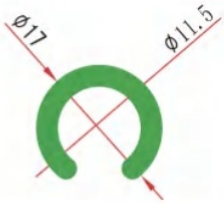

WR-17

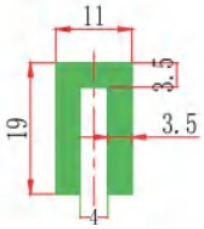

WR-18

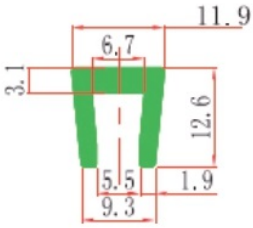

WR-19

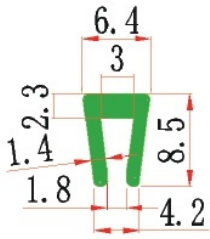

WR-20

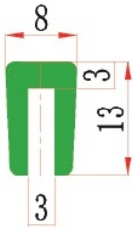

WR-21

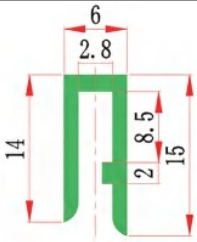

WR-SFB-2

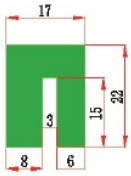

WR-SFB-1

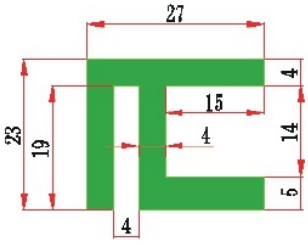

WR-SFB-3

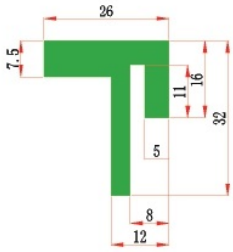

WR-22

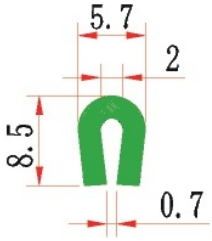

U-Profile , 3 meters /PC or 50 meters/Roll

WR-U-2632

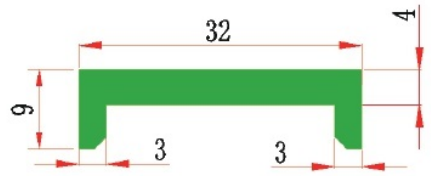

WR-U-3142

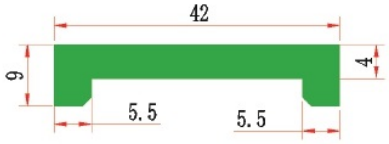

WR-U3141

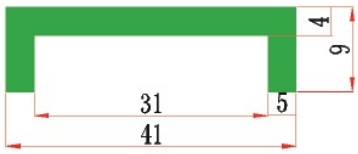

WR-U3143R

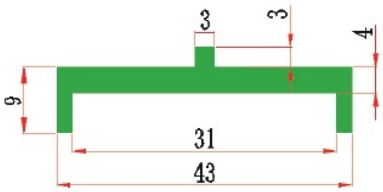

WR-U4145

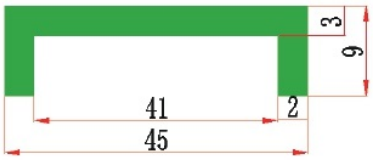

WR-U4145R

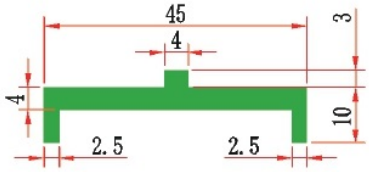

Other profile

WR-C5840

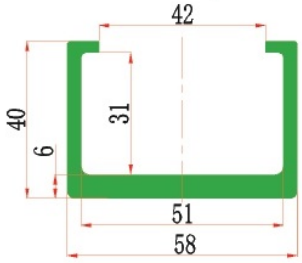

WR-FT403R

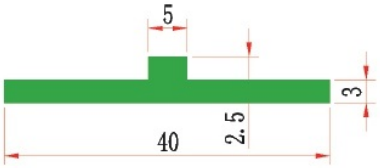

WR-T-425

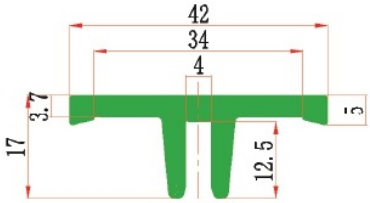

WR-L3410

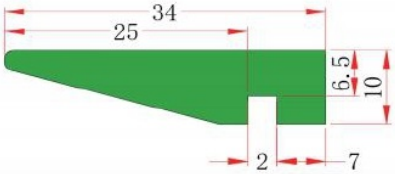

	Code	Profile Material	Color	Length	Other Package
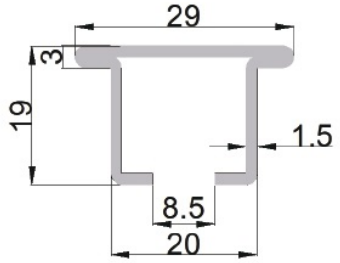	WR-SP-30	SS304	Natural	3m	—
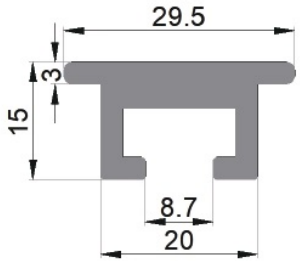	WR-AP-30	Aluminum	Natural	3m	—
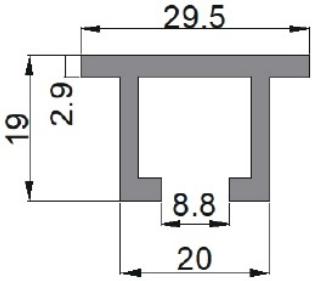	WR-AP-30-1	Aluminum	Natural	3m	—
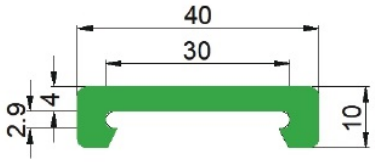	WR-U3040	Polyethylene	Green	3m	50m/roll
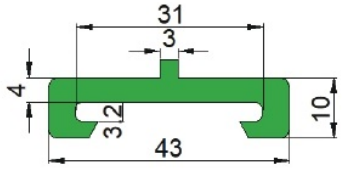	WR-U3143R	Polyethylene	Green	3m	50m/roll
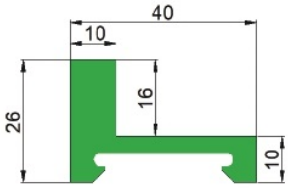	WR-L3040	Polyethylene	Green	3m	50m/roll

		Code	Profile Material	Color	Length	Weight (KG)
	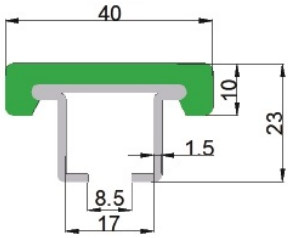	WR-S-40-F	Stianless steel 304	Green	3m	3.21
	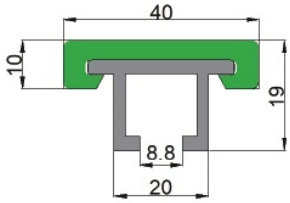	WR-A-40-F	Aluminum	Green	3m	2.26
	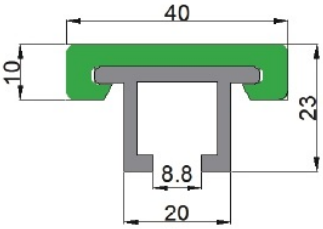	WR-A-40-F2	Aluminum	Green	3m	2.3
	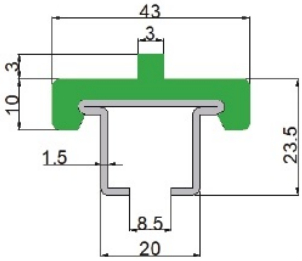	WR-S-43-B	Stianless steel 304	Green	3m	3.33
	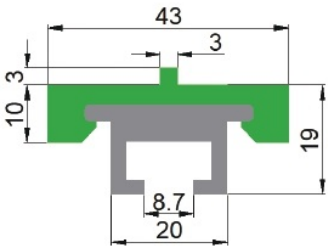	WR-A-43-B	Aluminum	Green	3m	2.26

		Code	Profile Material	Color	Length	Weight (KG)
	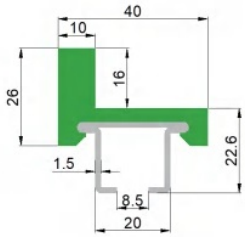	WR-S-40-L	Stianless steel 304	Green	3m	3.6
	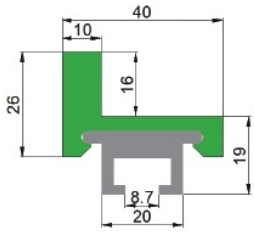	WR-A-40-L	Aluminum	Green	3m	2.7
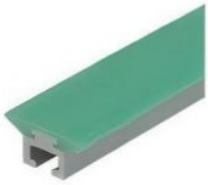	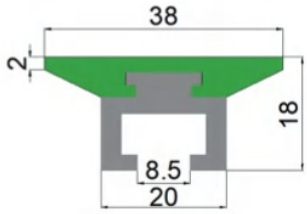	WR-A-38-F	Aluminum	Green	3m	2.7
	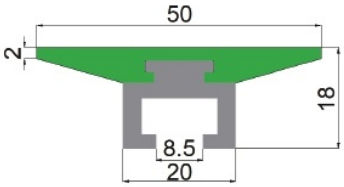	WR-A-50-F	Aluminum	Green	3m	2.7

Connecting joint matched with SS profile

Code	CJ-S-01

Bolt:M8*25

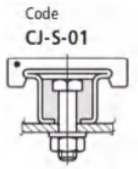

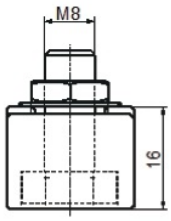

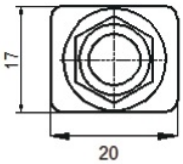

Code	CJ-S-02

Bolt:M8*20

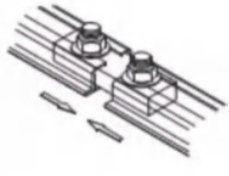

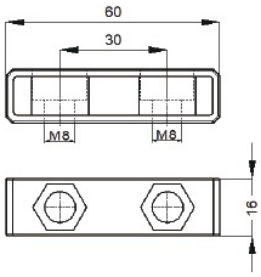

Chain shoes

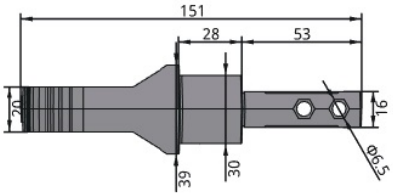		CSHOE-S-40-F	Note: only for WR-S-40-F
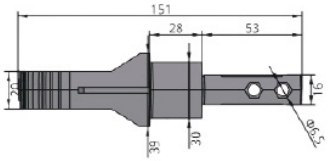		CSHOE-S-43-F	Note: only for WR-S-43-B

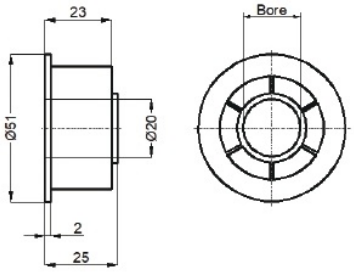

Return roller with flange

Code	Material	Bore	Weight
RF-01-RB16	PA	16 mm	0.018 kg
RF-01-RB20	PA	20 mm	0.02 kg

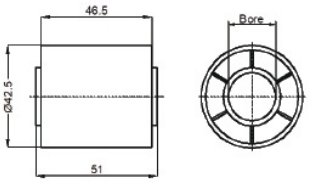

Spacer

Code	Material	Bore	Weight
RF-02-RB16	PA	16 mm	0.03 kg
RF-02-RB20	PA	20 mm	0.038 kg

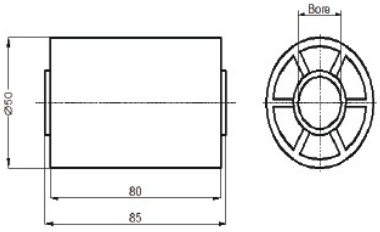

Spacer

Code	Material	Bore	Weight
RF-03-RB16	PA	16 mm	0.03 kg
RF-03-RB20	PA	20 mm	0.038 kg

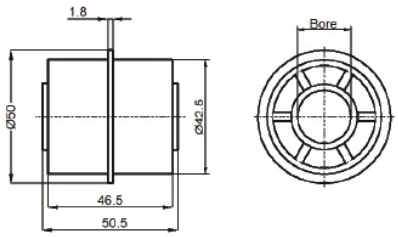

Return roller with flange

Code	Material	Bore	Weight
RF-04-RB16	PA	16 mm	0.036 kg
RF-04-RB20	PA	20 mm	0.042 kg

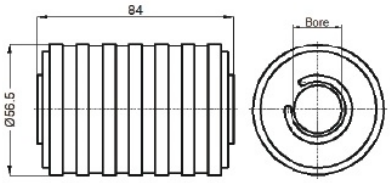

Watertight roller with rubber

Code	Material	Bore	Weight
RF-05-RB20	PA+TPE	20 mm	0.075 kg

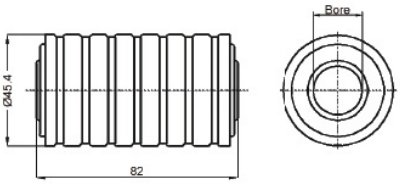

Watertight roller with rubber

Code	Material	Bore	Weight
RF-06-RB16	PA+TPE	16 mm	0.055 kg
RF-06-RB20	PA+TPE	20 mm	0.064 kg

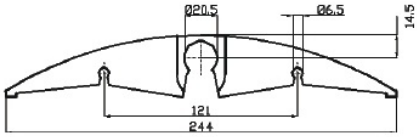

snap-on self-adjusting Slidubg shoe

Code	Material	Bore	Weight
SHOE-84L244-RB20	PC	20	0.078 kg

Round shape side guides

Code	profile materail	color	Length
SD-RS-17	SS304	White-UHMWPE	3 m

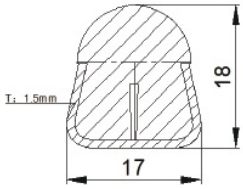

Brackets
P123

Clamps
P121

Round shape side guides

Code	profile materail	color	Length
SD-RS-20	SS304	Green-UHMWPE	3 m

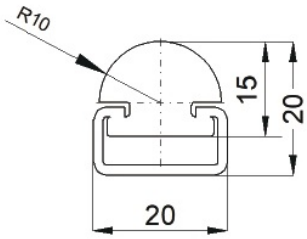

D-shape side guides

Code	profile materail	color	Length	W (mm)
SD-DS-20	SS304	White-UHMWPE	3 m	20
SD-DS-25	SS304	White-UHMWPE	3 m	25
SD-DS-32	SS304	White-UHMWPE	3 m	32
SD-DS-40	SS304	White-UHMWPE	3 m	40
SD-DS-50	SS304	White-UHMWPE	3 m	50

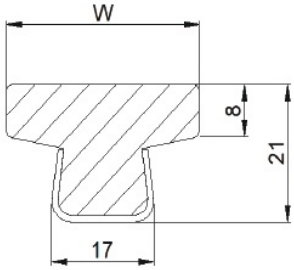

Flat shape side guides ,W=60

Code	profile materail	color	Length
SD-FS-60-G	Aluminum	Green-UHMWPE	3 m
SD-FS-60-W		White-UHMWPE	3 m
SD-FS-60-BL		Black-UHMWPE	3 m
SD-FS-60-B		Blue-UHMWPE	3 m

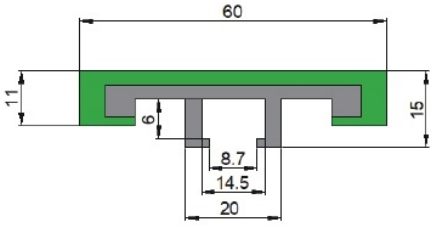

Flat shape side guides ,W=80 &100

Code	W(mm)	profile materail	color	Length
SD-FS-80-G	80	Aluminum	Green-UHMWPE	3 m
SD-FS-80-B	80		Blue-UHMWPE	3 m
SD-FS-100-G	100		Green-UHMWPE	3 m
SD-FS-100-B	100		Blue-UHMWPE	3 m

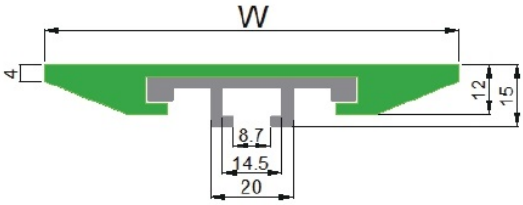

Code	materail
CJB-60	SS304

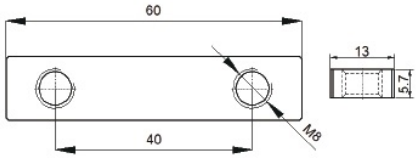

Flat shape side guides ,W=100&120

Code	W(mm)	profile materail	color	Length
SD-FS-100-B-1	100	Aluminum	Blue-UHMWPE	3 m
SD-FS-120-B	120		Blue-UHMWPE	3 m

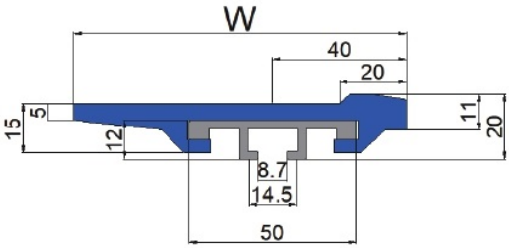

Code	materail
CJR-L-110	SS304

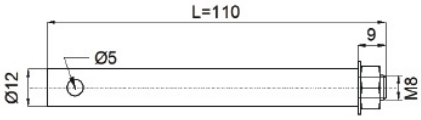

Roller side guide

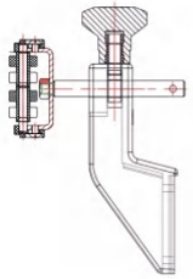

ref:Brackets & CJR-L-110

Material :

Straps in reinforced polyamide,rollers in acetal resin
Pins are in pom .Metal profiles are in SS304
Color of rollers: white.Color of Profile :Black
Supply unit : 1036 mm per length

Futures :

Low noise rollers
Long life and smooth operation

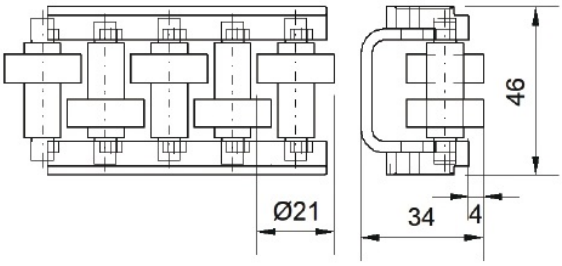

Code
SD-RSG-S-1

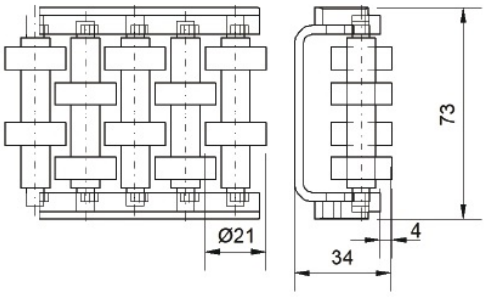

Code
SD-RSG-S-2

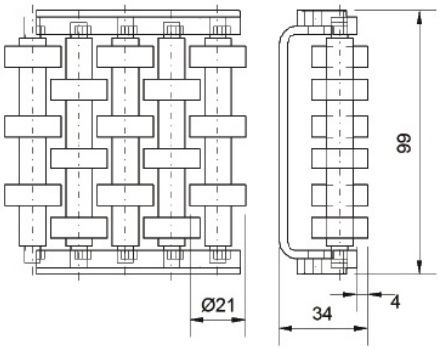

Code
SD-RSG-S-3

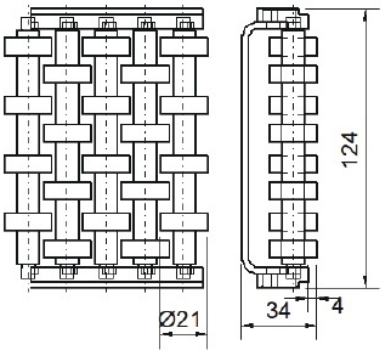

Code
SD-RSG-S-4

Side Guide solutions

Roller side guide

Material :
Rollers in acetal resin . Rubber material:TPU
Pins are in pom .Aluminum profiles
Color of rollers: white.
Supply unit : 3 meters per length

Futures :
Low noise rollers
Long life and smooth operation

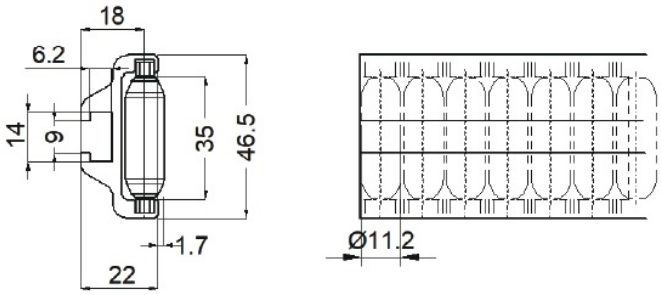

- **Assembly** code CJR-L-100
  - For the correct moduls assembly

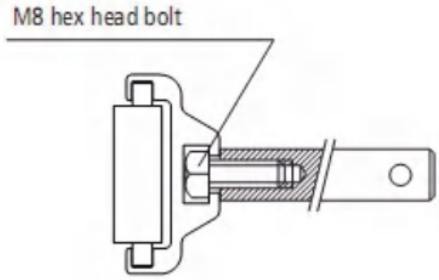

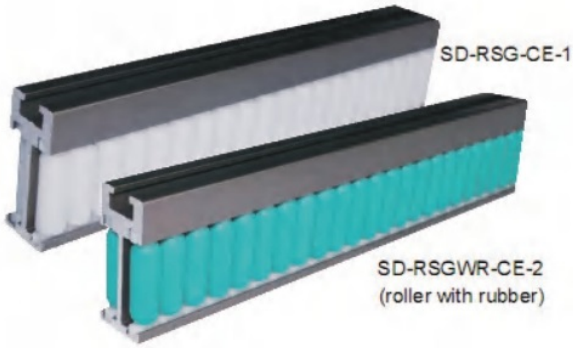

- **Accessories**
  code CJB-60-- Connecting bar

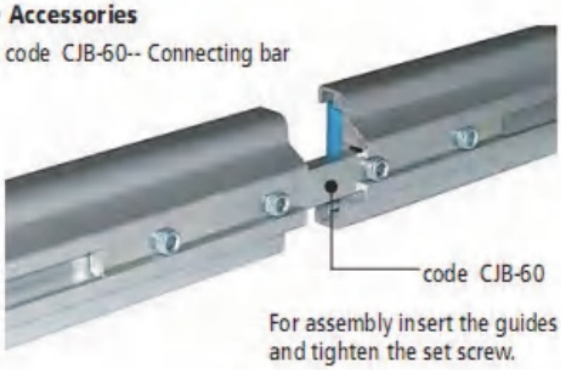

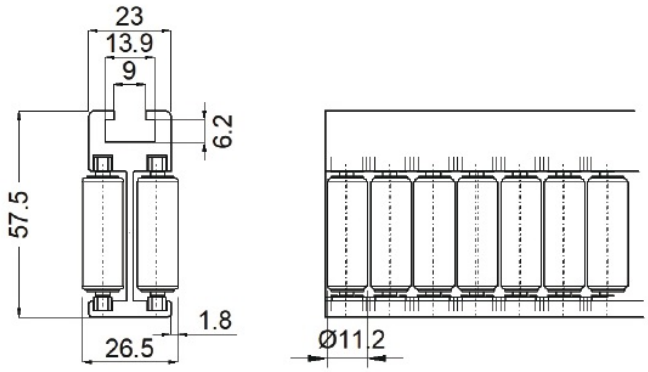

Side Guide solutions

Roller side guide-Flexible

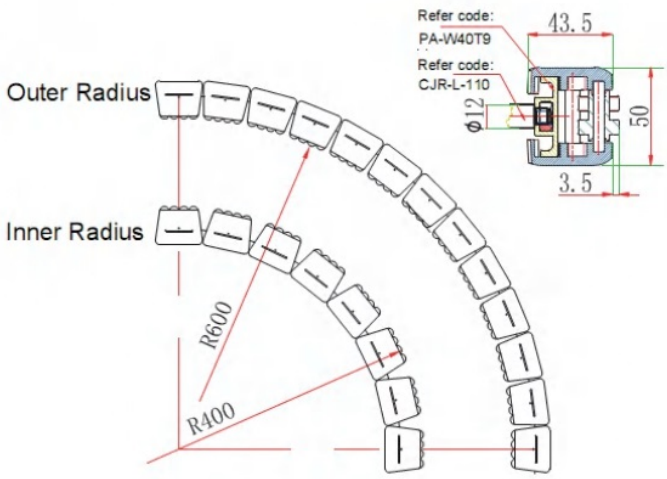

Material :
Straps in reinforced polyamide,
Pins and rollers are in pom
Color of rollers: white.Color of Profile :Black

Application:designed for rugged boxes, containers and shrink-wrapped products

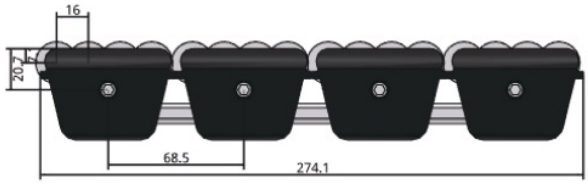

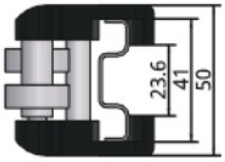

Code	Profile Matereial	L	Weight (kg)
SD-RSG-FS-274	SS304	3 m	6.5
SD-RSG-FA-274	Aluminum	3 m	6.3

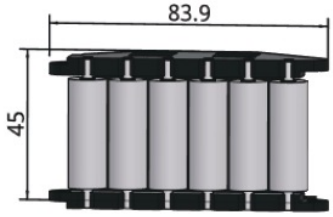

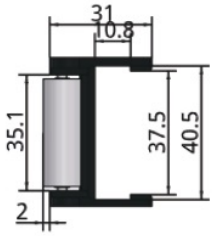

Code	Profile Matereial	L	Weight (kg)
SD-RSG-FS-84	SS304	3 m	5
SD-RSG-FA-84	Aluminum	3 m	4.8

Code	Profile Matereial	L	Weight (kg)
PS-W40T10	SS304	3 m	1.68
PA-W40T9	Aluminum	3 m	1.4

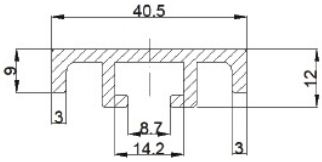

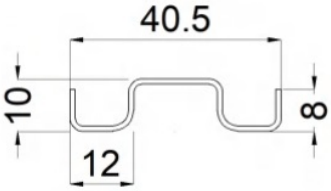

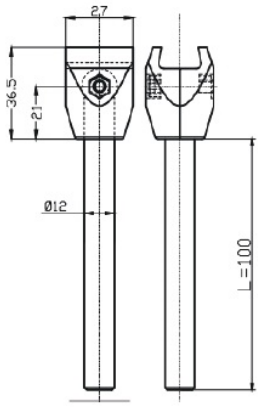

Single clamp with rod

Code : X01

Material: clamp in reinforced polyamide
bolts&nut in SS202 (M5*25)
rod in SS202
Supply:assembled
* Rod size refer XS12

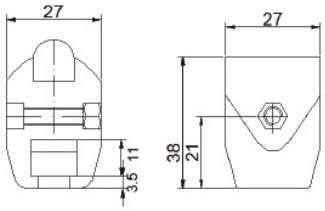

Single clamp with rod

Code : X01 w/o rod

Material: clamp in reinforced polyamide
bolts&nut in SS202 (M5*25)
* Rod size refer XS12

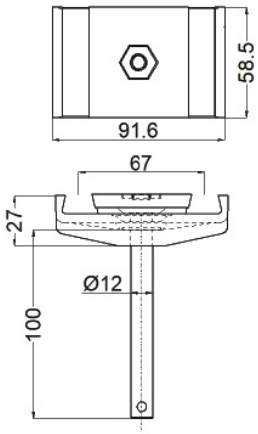

Double clamp with rod

Code :X02

Material: clamp in reinforced polyamide
rod &nut in SS202
nut :M10
Supply:assembled

*can be suppled without rod
* Rod size refer XS13

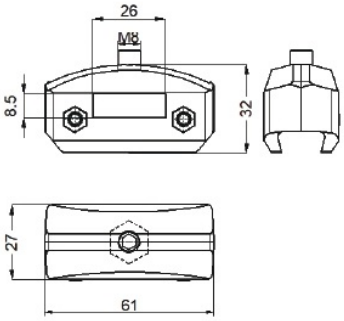

AD Single clamp for concial bar

Code :X03

Material: clamp in reinforced polyamide
bolts & nut in SS202
Supply:assembled

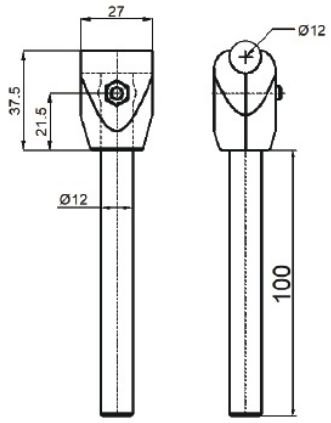

Single clamp with rod

Code : X04

Material: clamp in reinforced polyamide
bolts&nut in SS202 (M5*20)
rod in SS202
Supply:assembled

* Rod size refer XS12
*for φ12 tube only

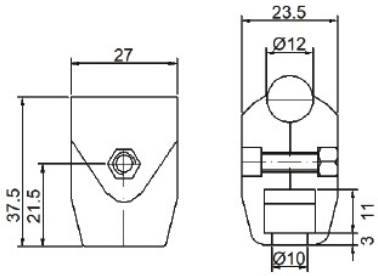

Single clamp

Code : X04 w/o rod

Material: clamp in reinforced polyamide
bolts&nut in SS202 (M5*20)
* Rod size refer XS12

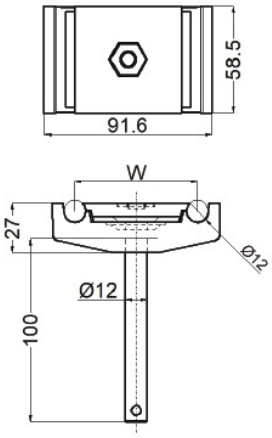

Double clamp with rod

Code : X05A ,W=67

Code : X05B ,W=40

Material: clamp in reinforced polyamide
rod &nut in SS202
nut :M10
Supply:assembled

*can be suppled without rod
* Rod size refer XS13
*for φ12 tube only

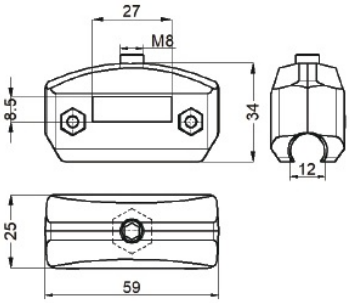

AD Single clamp for round bar

Code : X06

Material: clamp in reinforced polyamide
bolts & nut in SS202
supply:assembled
for *φ12 tube only

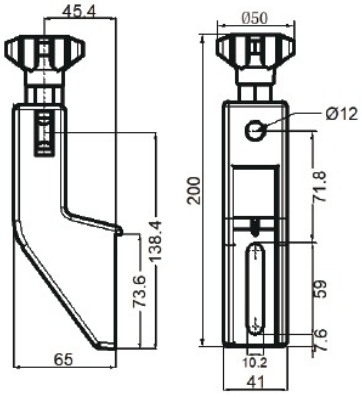

Side guide brackets -fixed top

Code : X07

Material: reinforced polyamide
eye bolt and spacer in SS202
knob in polyamide with nickel plated brass insert
*For φ12 rod only

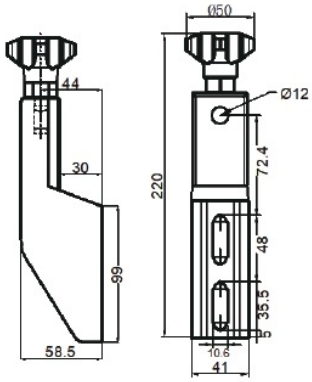

Side guide brackets -fixed top

Code : X08

Material: reinforced polyamide
eye bolt and spacer in SS202
knob in polyamide with nickel plated brass insert
*For φ12 rod only

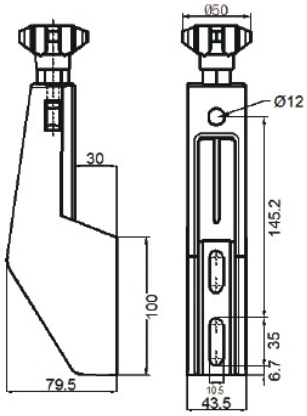

Side guide brackets -fixed top

Code :X09

Material: reinforced polyamide
eye bolt and spacer in SS202
knob in polyamide with nickel plated brass insert
*For φ12 rod only

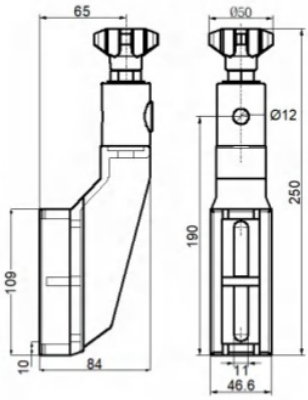

Side guide brackets -adjustable

Code :X10

Material: reinforced polyamide
eye bolt and spacer in SS202
knob in polyamide with nickel plated brass insert
*For φ12 rod only

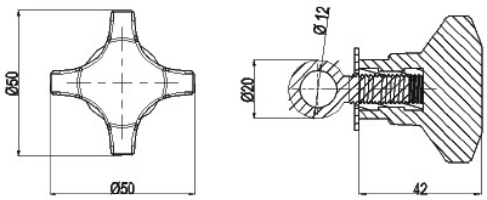

Knob & eye bolt

Code : X11

Material: reinforced polyamide
eye bolt and spacer in SS202
knob in polyamide with nickel plated brass insert
*For φ12 rod only
* availble for all side guide brackets

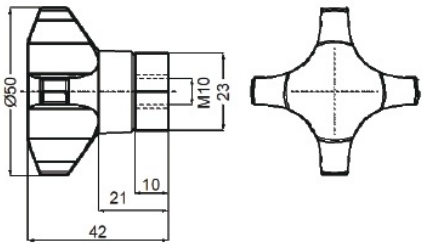

Knob-Female

Code : X12

Material: reinforced polyamide
knob in polyamide with nickel plated brass insert

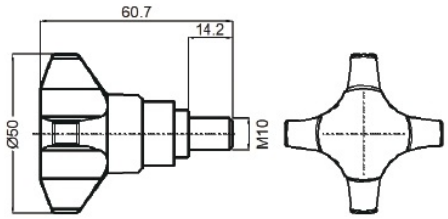

Knob-Male

Code : X13

Material: reinforced polyamide
Screws in SS304

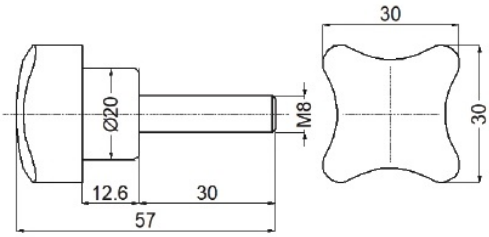

Knob-Male

Code : X14

Material: reinforced polyamide
Screws in Zinc plated steel

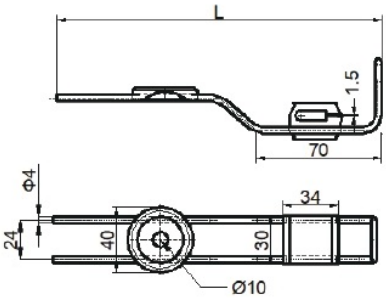

Drip Tray Brackets

Code : X15

Material : Metal part in SS304
clamp in polyamide
L=200
*other L size MOQ:300 PC
*availbe with X07

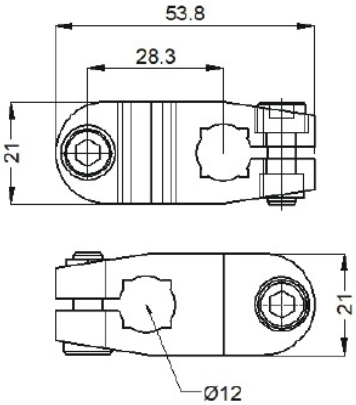

Cross Clamp
Code : X16-1
Material: reinforced polyamide
Bolts and nuts in SS202
*For φ12 rod only

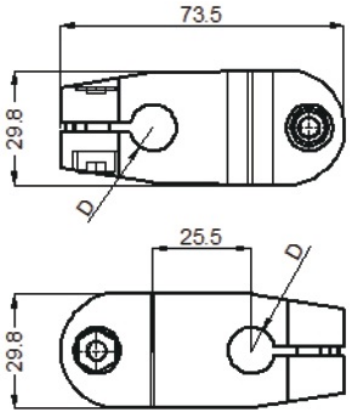

Cross Clamp
Code : X16-2
Material: reinforced polyamide
Bolts and nuts in SS202
*For φ12/16/18 rod

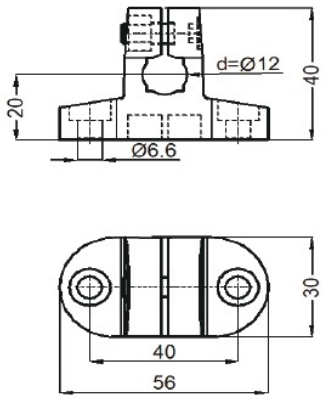

Cross Clamp
Code : X17-1
Material: reinforced polyamide
Bolts and nuts in SS202
*For φ12 rod only

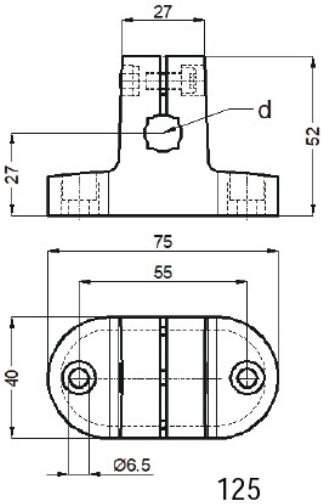

Cross Clamp
Code : X17-2
Material: reinforced polyamide
Bolts and nuts in SS202
*For φ12/16/18 rod

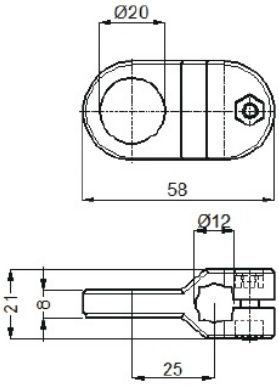

Cross Clamp
Code : X18
Material: reinforced polyamide
Bolts and nuts in SS202

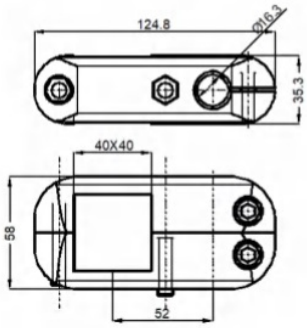

Cross Block
Code : X19
Material: reinforced polyamide
Bolts and nuts in SS202

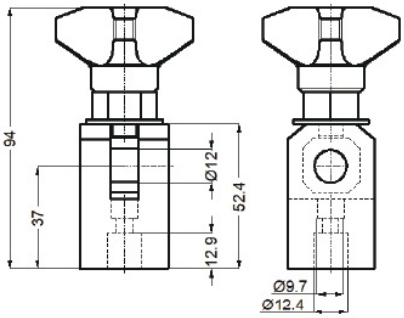

Connecting joint
Code : X20
Material: reinforced polyamide
eye bolt and spacer in SS202
knob in polyamide with nickel
plated brass insert
*For φ12 rod only

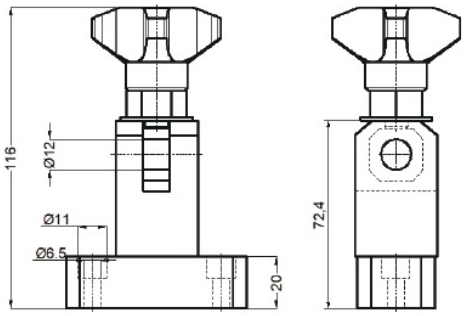

Connecting joint
Code : X21
Material: reinforced polyamide
eye bolt and spacer in SS202
knob in polyamide with nickel
plated brass insert
*For φ12 rod only

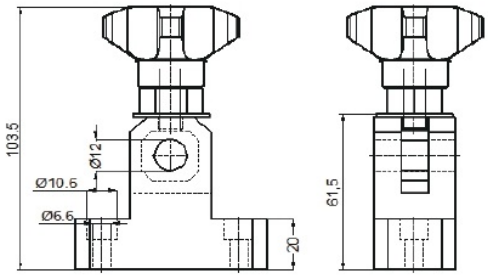

Connecting joint
Code : X21B
Material: reinforced polyamide
eye bolt and spacer in SS202
knob in polyamide with nickel
plated brass insert
*For φ12 rod only

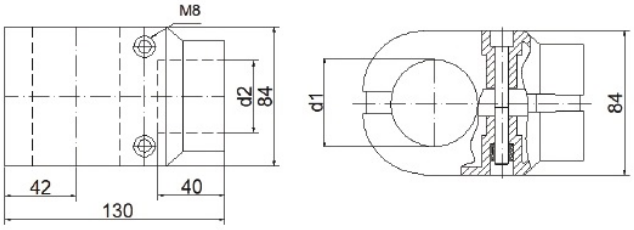

Connecting joint

Code : X22

Material: reinforced polyamide
Bolts and nuts in SS202
d1=φ50.8 or 48.3mm
d2=42.5

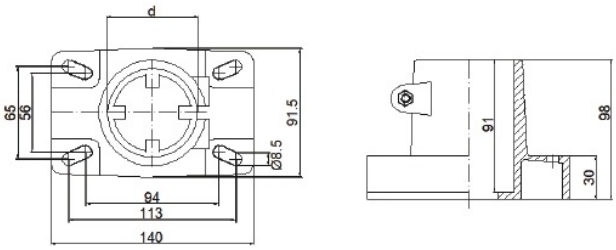

Support head

Code : X23A

Material: reinforced polyamide
Bolts and nuts in SS202
d=φ50.8 or 48.3mm

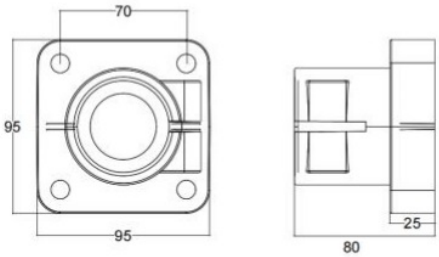

Support head

Code : X23B

Material: reinforced polyamide
Bolts and nuts in SS202
d=φ50.8 or 48.3mm

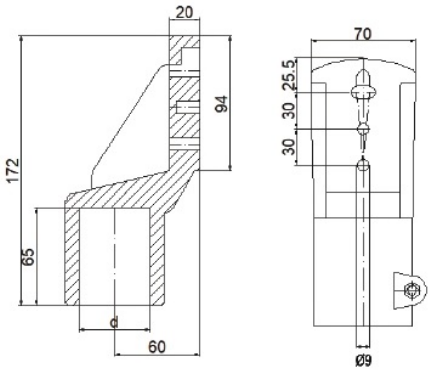

Mounting brackets

Code : X24A

Material: reinforced polyamide
Bolts and nuts in SS202
d=φ50.8 or 48.3mm

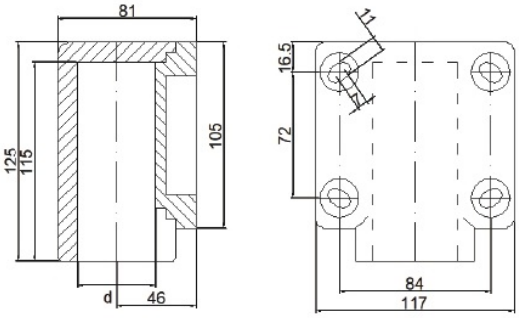

Mounting brackets

Code : X24B

Material: reinforced polyamide
Bolts and nuts in SS202
d=φ50.8 or 48.3mm

SS Connecting joint-A

Tube	Code
φ50.8	XS01

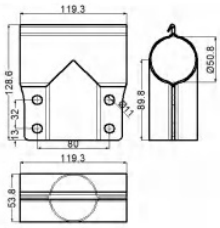

SS Connecting joint-B

Tube	Code
φ50.8	XS02

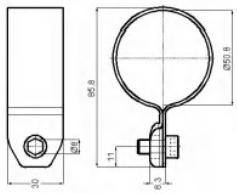

Head connecting joint

Tube	Code
φ12	XS03

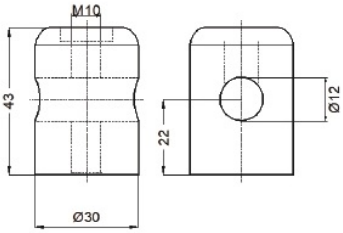

Head connecting joint

size	Code
70*120	XS06

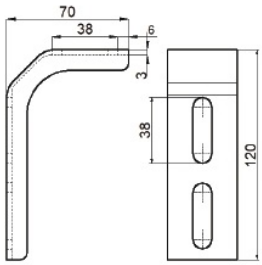

Head connecting joint

Tube	Code
φ12	XS04

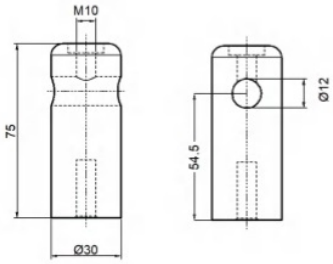

Head connecting joint

size	Code
70*140	XS07

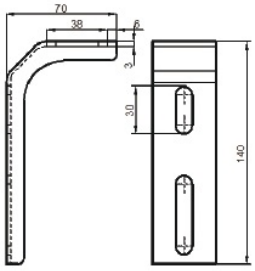

knob-Male-M10

Code
XS05

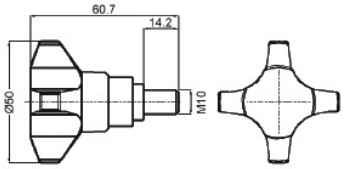

Head connecting joint

size	Code
70*70	XS08

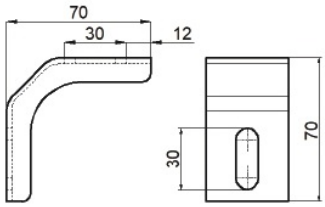

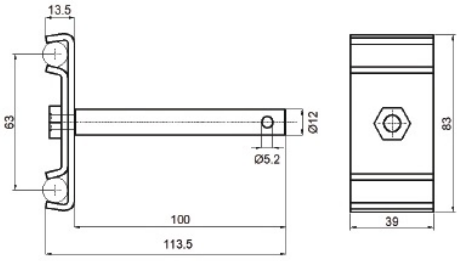

SS Double clamp with rod

Code :XS09

Material:Stainless Steel
washer rod &nut in stainless steel
nut :M8
Available for φ12 round tube

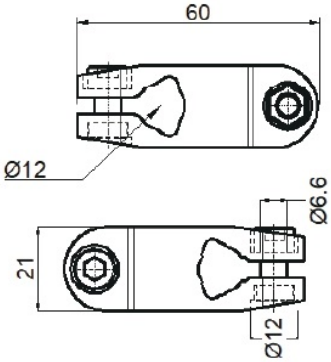

SS Cross clamp

Code :XS10

Material:Stainless Steel 304
*For φ12 rod only

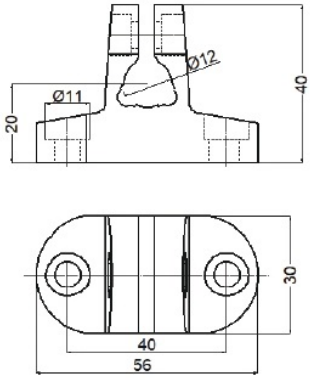

SS Cross clamp

Code :XS11

Material:Stainless Steel 304
Matched Hexagon screws-M6
（not supply）
*For φ12 rod only

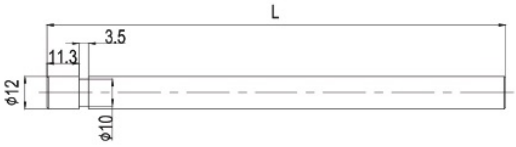

SS Rod

Code :XS12

Material:SS304 or Zinc plated Steel
Standard L size is 100

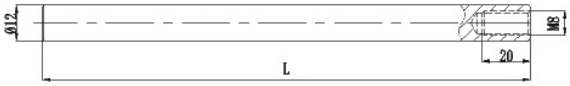

SS Rod

Code :XS13

Material:SS304 or Zinc plated Steel
Standard L size is 100

Support base

Material:Reinforced polyamide. Bolts and nuts in SS202
* Standard Articulated foot is AF-2,D80M16L75 . Rod:SS202
*Without foot is available .

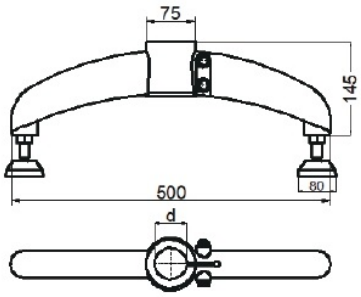

Bipod

d	Code
φ50.8	X26-1
φ48.3	X26-2

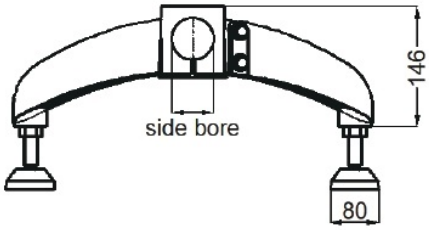

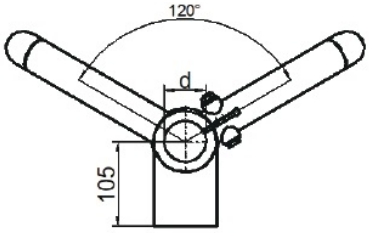

Bipod and half

d	Side bore	Code
φ50.8	φ38	X27-1
φ50.8	φ42.5	X27-2
φ48.3	φ38	X27-3
φ48.3	φ42.5	X27-4

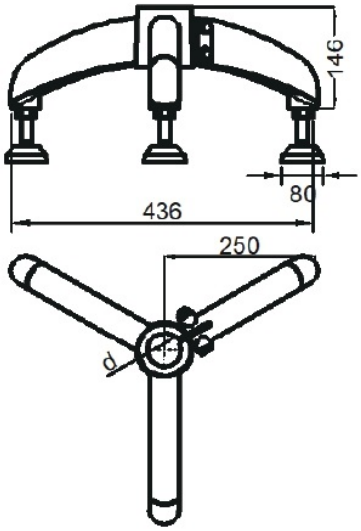

Tripod

d	Code
φ50.8	X28-1
φ48.3	X28-2

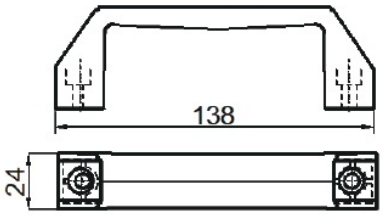

Handle-large

Code : X29

Material: reinforced polyamide

Matched Hexagon screws-M6（not supply）

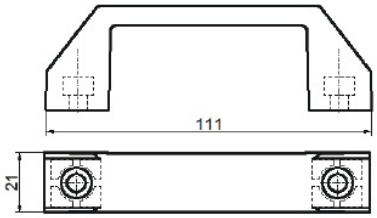

Handle-small

Code : X30

Material: reinforced polyamide

Matched Hexagon screws-M6（not supply）

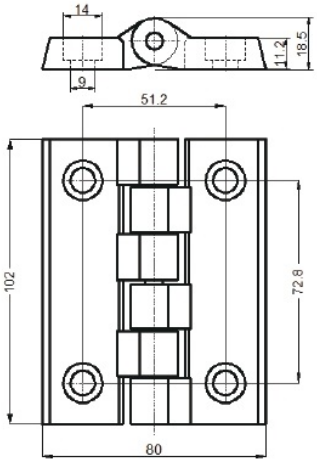

Hinge-A

Code : X31

Material: reinforced polyamide

Matched Hexagon screws-M8（not supply）

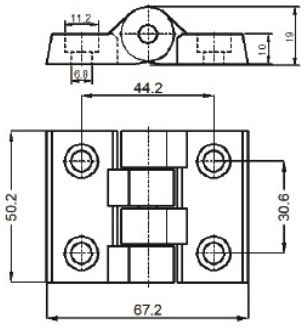

Hinge-B

Code : X32

Material: reinforced polyamide

Matched Hexagon screws-M6（not supply）

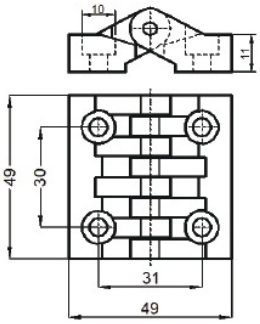

Hinge-C

Code : X33

Material: reinforced polyamide

Matched Hexagon screws-M5（not supply）

Modular Transfer plate

Material: reinforced polyamide

Roller :POM-Blue

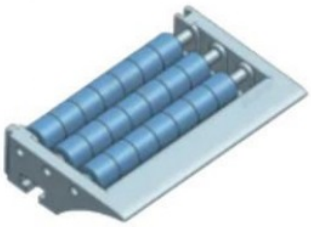

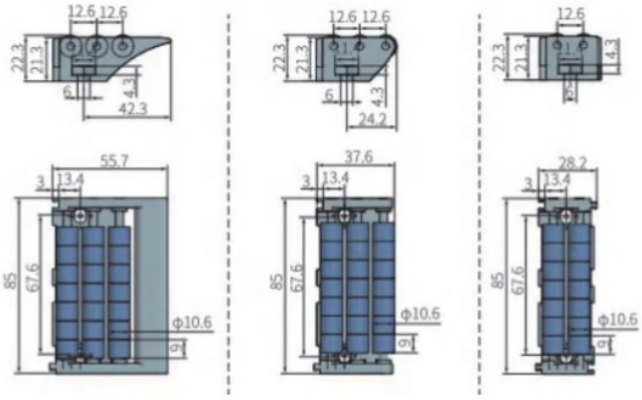

X34-1 X34-2 X34-3

Split shaft collar

Material: polyamide ,screws and nuts are in stainless steel

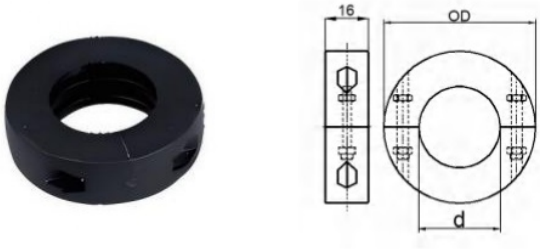

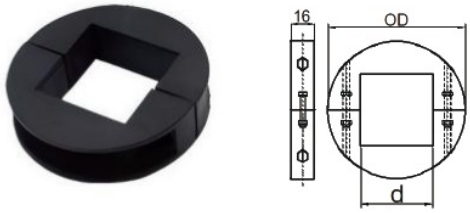

Split round shaft collars

Code	Boreφ	OD
SC-R20M	20	44
SC-R25M	25	51
SC-R30M	30	56
SC-R35M	35	61
SC-R40M	40	66

Split square shaft collars

Code	Boreφ	OD
SC-S25M	25	51
SC-S30M	30	56
SC-S40M	40	75
SC-S50M	50	95
SC-S60M	60	110

Ratchet handles

Female version
Material :polyamide ,
insert in nickel plated brass

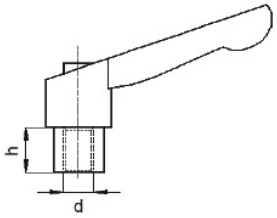

Code	d	h
RH-F-M6	M6	10
RH-F-M8	M8	12
RH-F-M10	M10	17
RH-F-M12	M12	17
RH-F-M16	M16	20

Male version
Material :polyamide ,
Theard insert in zinc aluminum alloy

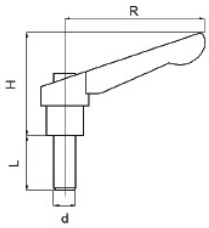

Code	R	d	H	L
RH-M-M6-L	45	M6	33	16 20 25 30
RH-M-M8-L	63	M8	44	20 25 32 40
RH-M-M10-L	80	M10	55	20 25 32 40
RH-M-M12-L	95	M12	55	20 25 40 50
RH-M-M16-L	114	M16	60	30 50 70

* if L=16 ,pls mention code RH-M-M6-L16

NoseBar with roller

Material of body : Nylon

Material of roller : UHMWPE 1000

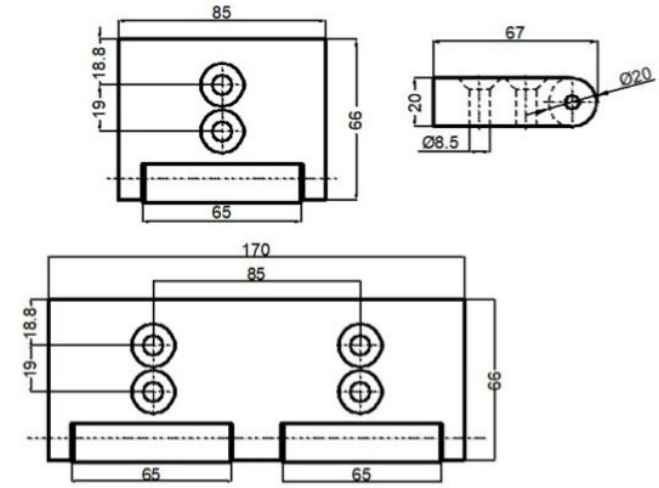

Type	W(mm)	Code
A	85	NB-A-85
A	170	NB-A-170

NoseBar

Material of body : UHMWPE 400

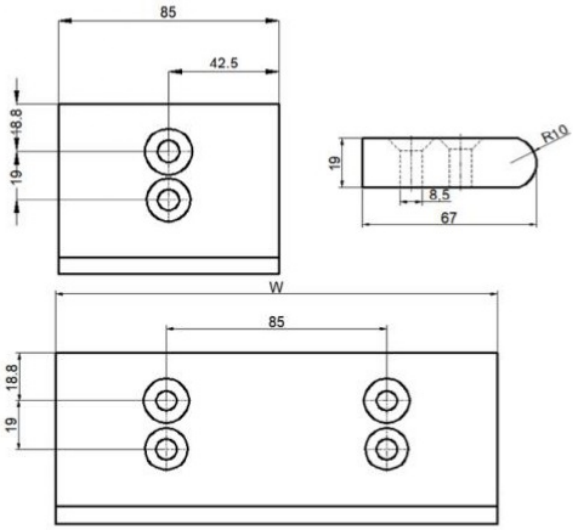

Type	W(mm)	Code
B	85	NB-B-85
B	170	NB-B-170
B	….	….
B	680	NB-B-680

NoseBar FOR X1500

Material of body : UHMWPE 400

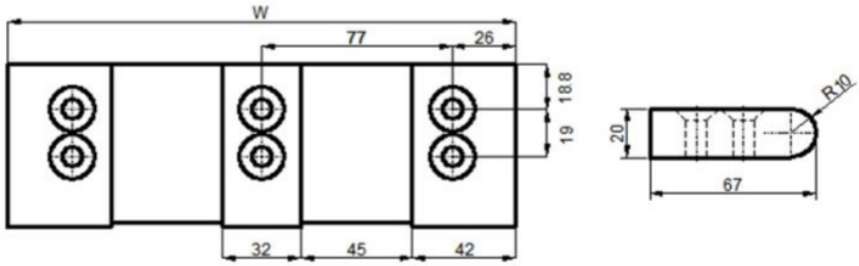

Type	W(mm)	Code
C	206	NB-C-206
C	283	NB-C-283
C	360	NB-C-360
C	437	NB-C-437
C	514	NB-C-514
C	591	NB-C-591

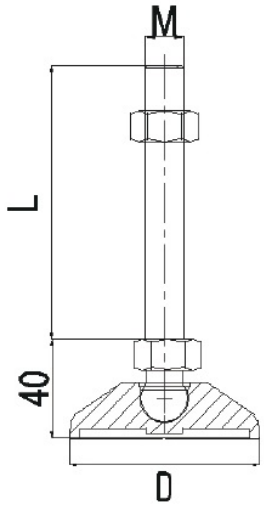

Code	D	M	L
AF-1	60,80,100	12/16/20/24	75/100/150/200

Anti-slip with rubber is availble for D60,D80
Material of rod :SS202 / SS304
Other non-standard L size pls contact sales

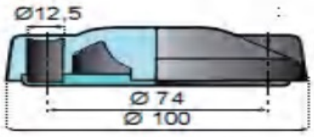

D80/100 with two fixed holes ,φ12.5

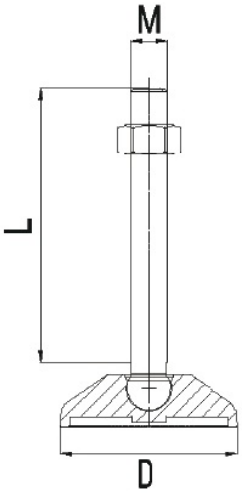

Code	D	M	L
AF-2	60,80,100	12/16/20/24	75/100/150/200

Anti-slip with rubber is availble for D60,D80
Material of rod :SS202 / SS304
Other non-standard L size pls contact sales

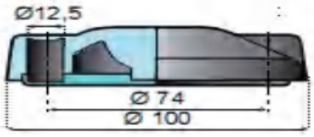

D100 with two fixed holes ,φ12.5

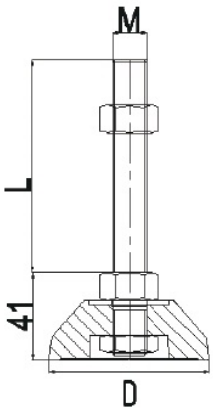

Code	D	M	L
AF-3	60,80,100,125	12/16/20/24	75/100/150/200

Anti-slip with rubber is availble for D60,D80
Material of rod :SS202/ SS304
Other non-standard L size pls contact sales

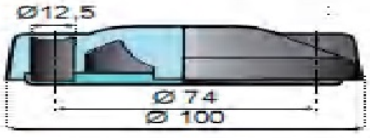

D100 with two fixed holes ,φ12.5

Threaded tube ends for round and square tubes

Round Tubes

Material: Polyamide ,thread bush in Nickel plataed brass

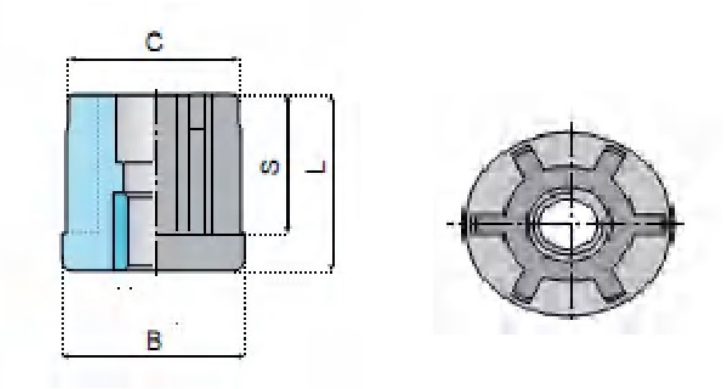

B	C	L	S	Thread Meric	
				M12	M16
38	35.5	46.5	29	TE-R38-M12	TE-R38-M16
48	45.8	55	45	——	TE-R48-M16
50	48.4	49	38	——	TE-R50-M16

Square Tubes

Material: Polyamide ,thread bush in Nickel plataed brass

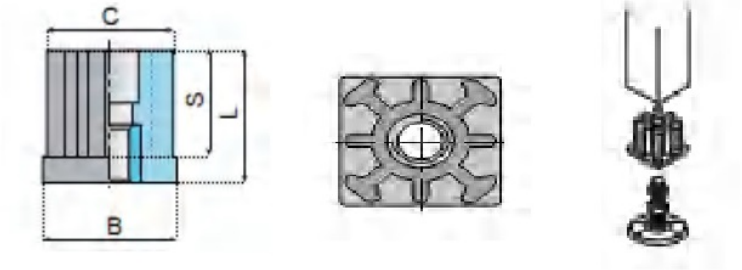

B	C	L	S	Thread Meric	
				M12	M16
38	35.4	43	35	TE-S38-M12	TE-S38-M16
40	37.5	55	45	TE-S40-M12	TE-S40-M16
50	47.5	55	44	——	TE-S50-M16

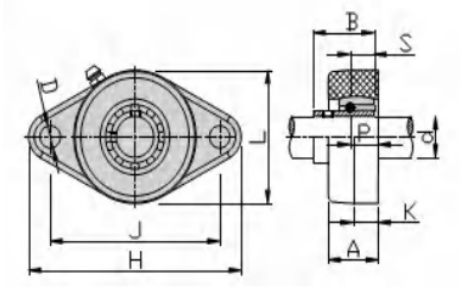

Material of housing : PBT
Material of bearing: Steel or SS304
Color of cap : Black or White

Code	d	H	J	L	K	A	D	B	S	P
UCFL205	25	131	99	70	14.3	28	11	34	14.3	16.5
UCFL206	30	147	117	80	14.3	30.5	11	38.1	15.9	18
UCFL207	35	164	130	90	15.5	32	11	42.9	17.5	19
UCFL208	40	178	144	100	17	35	11	49.2	19	21.5

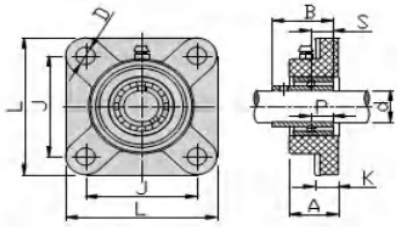

Material of housing : PBT
Material of bearing: Steel or SS304
Color of cap : Black or White

Code	d	L	K	A	D	B	S	P
UCFP205	25	95	70	14.3	11	34	14.3	17
UCFP206	30	107	83	14.3	11	38.1	15.9	19
UCFP207	35	118	92	155	11	42.9	17.5	21.5
UCFP208	40	130	102	17	11	49.2	19	23

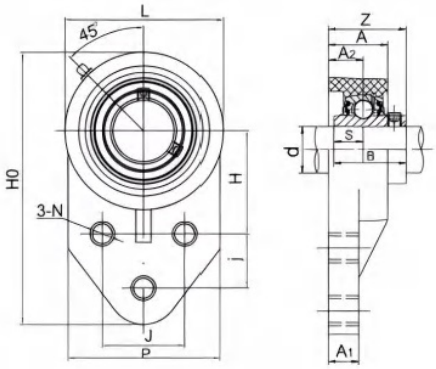

Material of housing : PBT
Material of bearing: Steel or SS304
Color of cap : Black or yellow

Code	d	H0	H	J	I	A2	A1	A	N	L	P	B	S	Z
UCFB204	20	108	42.9	38.1	22.2	19.7	11	31.2	11	63	62	31	12.7	38
UCFB205	25	121	46	41.3	28.6	21.3	12	33	11	70	63	34.1	14.3	41.1
UCFB206	30	139	52.4	47.6	31.8	22.9	15	35.4	11	83	76	38.1	15.9	47.6
UCFB207	35	158	60.3	50.8	31.8	24.5	17	37.5	13	94	89	42.9	17.5	50.8
UCFB208	40	178	67.3	54	35.5	26	19	39.5	13	103	99	49.2	19	54

Roller chain tensioner

RCT1

Material	
Chain Guide	UHMW-PE Green
Body	Plastic

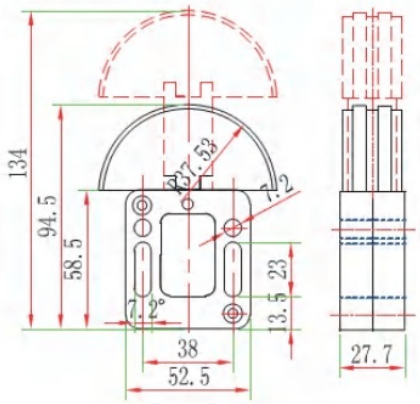

Simplex roller chain code	
DIN/ISO Chain No.	ANSI Chain No.
08A-1	40
10A-1	50
12A-1	60
16A-1	80
20A-1	100
06B-1	-
08B-1	-
10B-1	-
12B-1	-
16B-1	-
20B-1	-

Max working load : 130N

RCT2

Material	
Chain Guide	UHMW-PE Green
Body	Carton Steel

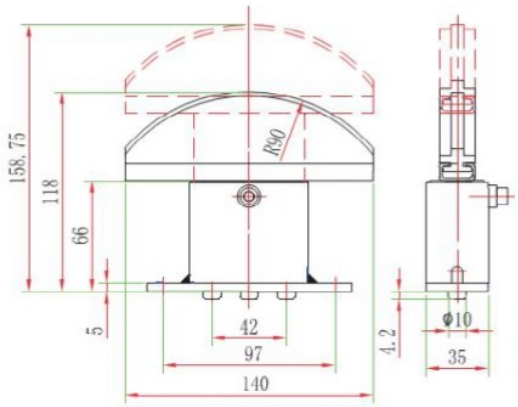

Duplex roller chain code	
DIN/ISO Chain No.	ANSI Chain No.
08A-2	40-2
10A-2	50-2
12A-2	60-2
16A-2	80-2
20A-2	100-2
06B-2	-
08B-2	-
10B-2	-
12B-2	-
16B-2	-
20B-2	-

Max working load : 180N